$8.95 08/10M
MRS CAROL A SZEKLY
Ph: 9435 5320
SILICON CHIP
KEEP
15 11
NEW
top
20100102300 3
300610 1

SILICON CHIP

JULY 2010
ISSN 1030-26
9 771030 266
PRINT POST APPROVED
- PP255003/01272
$8.95* NZ$11.00
INC GST INC GST

Electronics Goes Boating:

The latest in marine electronics from the 2010 Sanctuary Cove International Boat Show

HOW TO PROGRAM PICS *(a beginner's guide)* **PLUS A PICAXE Project Development Board to build**

3D TV: getting it from the stadium to the home

TOOLS FOR YOUR TRADE!

Battery Powered 6W Soldering Iron

Ideal for on-site repairs and PCB work. Heats to soldering temperature in about 10 seconds. Requires 3 x AA batteries.

- Dimensions: 175(L) x 36(W) x 18(D)mm

TS-1535 WAS $19.95

$14.95
SAVE $5.00

F-Connector Tool Set

All the tools you need for cutting, stripping and crimping F-connectors for coax cable installations. Put one in the tooly today.

The kit includes:
- Coax cable stripper
- Compression crimp tool
- Heavy duty cable cutter
- 10 x F-59 plugs
- Nylon storage case: 152(W) x 220(H) x 45(D)mm

TH-1804

$89.95

Autoranging SMT DMM

Specifically designed for SMT work with interchangeable probes and tweezer probes.

- Autoranging
- Continuity test
- Display: 6000 count
- CAT III 600V
- Dimensions: 110(H) x 36(W) x 21(D)mm

QM-1496

$79.95

MORE INFO

Interlocking Relay Socket

The easy way to add multiple relays to an electrical system. These relay bases interlock together and take standard 4/5 pin automotive relays. They also come with integral flying leads & crimp pins so termination is easy.

- Leads 150mm long

SY-4078

$8.50

Computer Tool Kit

All the essentials for doing some minor surgery to your PC. Don't forget your anti-static strap.

Kit contents:
Driver bit handle, Bits: Slotted 3mm, 4mm, PH 0, 1,T10, T15 Hex adaptors: 4mm, 5mm, Tweezers, IC extractor, Pearl catch

TD-2150 WAS $19.95

$14.95
SAVE $5.00

4 Tray Tool/Storage Case

Each compartment has a 233 x 122 x 32mm 13 compartment storage box for small items with dividers that can be removed to accommodate larger things. All the hinges and catches are the durable pintle type and the top tray has a generous 265 x 160 x 65mm space for ancillary items.

- Dimensions: 270(W) x 260(H) x 150(D)mm

HB-6302

$14.95

Rare Earth Magnets with Mounting Holes

Super powerful rare earth magnets with 4.5mm countersunk mounting holes so you can fix them to your project, to latch a door closed, etc.

Two sizes available:

Round 25(Dia) x 5mm LM-1626 $16.95
Rectangle 50(L) x 25(W) x 5(H)mm LM-1628 $19.95

FROM **$16.95**

Assorted Bungee Cords 25 Pk

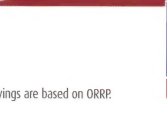

An assortment of useful size bungee cords. Keep a pack in the car, boat or caravan. Handy storage container included. See website for full pack contents.

Limited stock. While stocks last.

HP-0636

$12.95

Micro Drill Bit Set 0.7 - 2.2mm

Every hobby engineer needs a set of micro drill bits in the workshop. Quality HSS in incremental sizes from 0.7 to 2.2mm.

Sizes: 0.7mm, 0.8mm, 0.9mm, 1.0mm, 1.2mm, 1.4mm, 1.6mm, 1.8mm, 2.0mm, 2.2mm.

TD-2407 WAS $14.95

$10.95
SAVE $4.00

15 Piece Micro Driver Set

This handy set will fit the bill for all those microscopic fasteners. The ergonomic handles are colour coded for easy identification and they come in a sturdy storage case.

The set contains:
Slotted: 1mm, 1.4mm, 1.8mm, 2.4mm
Phillips: #000, #00, #0, #1
Torx: T5, T6,T7, T8
Hex: 1.5mm, 2mm, 2.5mm
Drivers: 105mm long
Case size: 192(L) x 130(W) x 26(H)mm

TD-2069

$24.95

High Quality Banana Piggyback Test Leads

A set of factory-moulded piggy-back style banana plugs, each connected by one metre of high-quality 500VDC 12A rated cable. The set contains 2 x black, 2 x red and 1 each of blue, yellow and green leads - 7 in all.

WT-5326

$24.95

DDPT Illuminated IP67 Rated Pushbutton Switches

IP67 rated for industrial use or other harsh environments. Illuminated, metal body, DPDT, on-off or momentary action. Rated for 250VAC @ 3A, with 12VDC LED illumination. Mounting hole 16mm.

Red DPDT	SP-0791 $17.50
Green DPDT	SP-0792 $17.50
Blue DPDT	SP-0793 $17.50
Red DPDT Momentary	SP-0796 $14.50
Green DPDT Momentary	SP-0797 $14.50

FROM **$14.50**

DPDT Illuminated IP65 Rated Pushbutton Switches

IP65 rated for use in harsh environments. Illuminated, DPDT, on-off or momentary action. Rated for 250VAC @ 5A, with 12VDC LED illumination. Mounting hole 15mm.

Red DPDT Momentary	SP-0741 $9.95
Red DPDT	SP-0745 $12.95
Green DPDT Momentary	SP-0747 $9.95
Green DPDT	SP-0749 $12.95

FROM **$9.95**

To order call 1800 022 888

www.jaycar.com.au

Prices valid until 23/07/2010. While stocks last. No rainchecks. Savings are based on ORRP.

Jaycar Electronics
Better, More Technical

Contents

SILICON CHIP
Vol.23, No.7; July 2010
www.siliconchip.com.au

Features

11 Electronics Goes Boating
The recent Sanctuary Cove (Qld) boat show featured some jaw-dropping craft. But what really stood out was the advanced electronics now included in just about every one of those boats – by Kevin Poulter

18 3DTV: From Stadium To Living Room
Some impressive technology is involved in 3DTV production. Here's a look at what's involved in getting 3DTV live from the sports field to your home – by Nicholas Vinen

26 Programming PIC Microcontrollers: How It's Done
Ever wondered how to program a PIC microcontroller chip if you're not buying a kit or if you want to upgrade the firmware to a later version? Here's a step-by-step guide to doing it yourself – by Mauro Grassi

Projects To Build

30 An Intelligent 12V Fan Controller
Does your PC make more noise than it should? It's probably mostly fan noise! Slowing the fans down will reduce the noise but if you go too far, you could fry the CPU! This intelligent fan controller is the answer – by Geoff Graham

58 PICAXE Project Development System
Featuring a USB interface and a ZIF (zero insertion force) socket, this low-cost board will allow hardware/software development & debugging for over 90% of the chips in the PICAXE range – by Jeff Monegal

65 Lab-Standard 16-Bit Digital Potentiometer
Here's a digital programmable voltage divider that's easy to build. You can use it to provide an accurate adjustable output from a precision voltage reference for meter calibration and other tasks – by Jim Rowe

80 Dual-Tracking ±19V Power Supply, Pt.2
Final article on our new 0V to ±19V dual-tracking supply has all the assembly and check-out details – by Nicholas Vinen

Special Columns

40 Circuit Notebook
(1) Using 12V LED Replacement Lamps In Cars; (2) UHF Link For Remote Control Extender; (3) Modifying The Flexitimer For Short Intervals; (4) Sound-Trigger For A Canon 350D Camera

44 Serviceman's Log
Procrastination is the thief of time – by the Serviceman

94 Vintage Radio
Reflex receivers: why they were necessary – by Rodney Champness

Departments

2 Publisher's Letter
4 Mailbag
39 Order Form
57 Product Showcase
99 Ask Silicon Chip
101 Notes & Errata
102 Market Centre

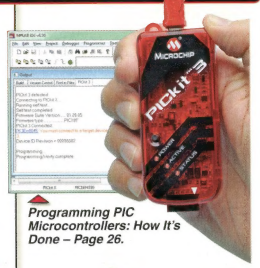

Programming PIC Microcontrollers: How It's Done – Page 26.

Intelligent 12V Fan Controller – Page 30.

PICAXE Project Development System – Page 58.

Lab-Standard 16-Bit Digital Potentiometer – Page 65.

SILICON CHIP
www.siliconchip.com.au

Publisher & Editor-in-Chief
Leo Simpson, B.Bus., FAICD

Production Manager
Greg Swain, B.Sc. (Hons.)

Technical Editor
John Clarke, B.E.(Elec.)

Technical Staff
Ross Tester
Jim Rowe, B.A., B.Sc
Mauro Grassi, B.Sc. (Hons), Ph.D
Nicholas Vinen

Photography
Ross Tester

Reader Services
Ann Morris

Advertising Enquiries
Glyn Smith
Phone (02) 9939 3295
Mobile 0431 792 293
glyn@siliconchip.com.au

Regular Contributors
Brendan Akhurst
Rodney Champness, VK3UG
Kevin Poulter
Mike Sheriff, B.Sc, VK2YFK
Stan Swan

SILICON CHIP is published 12 times a year by Silicon Chip Publications Pty Ltd. ACN 003 205 490. ABN 49 003 205 490. All material is copyright ©. No part of this publication may be reproduced without the written consent of the publisher.

Printing: Hannanprint, Noble Park, Victoria.

Distribution: Network Distribution Company.

Subscription rates: $94.50 per year in Australia. For overseas rates, see the order form in this issue.

Editorial office:
Unit 1, 234 Harbord Rd,
Brookvale, NSW 2100.

Postal address: PO Box 139,
Collaroy Beach, NSW 2097.

Phone (02) 9939 3295.

Fax (02) 9939 2648.

E-mail: silicon@siliconchip.com.au

ISSN 1030-2662
Recommended and maximum price only.

Publisher's Letter

Today's TV – brilliant pictures, mediocre sound

One of our correspondents in this month's Mailbag pages bemoans the fact that his latest whiz-bang flat-screen TV does not have analog audio outputs. That is part of a larger complaint that the sound quality from his huge TV set's teeny rear-firing loudspeakers is distinctly poor.

In fact, as far as we can determine, all large LCD and plasma panel TV sets do not have any sort of analog audio outputs which you could otherwise connect to a decent stereo system. Instead, they usually have a TOSLINK optical output which is evidently intended to be connected to an audio system which has optical inputs and a digital-to-analog converter (DAC).

There are two possible reasons why modern sets lack analog audio outputs. The first is technical, in that such sets probably don't have any analog signals anywhere in the chassis, with even the audio amplifiers being fully digital.

The second reason is marketing, in that it gives the retailer the opportunity to "up-sell" the TV buyer to a companion home-theatre sound system which might be 5.1 channels, 6 channels, 7.2 channels or you name it. That's all very well for the retailer and it does solve the problem of poor TV sound while also providing for remote control of the sound via a universal remote.

The problem is that many people, probably most, don't really want the extra five, six or more speaker boxes it takes to go with their big TV set. Let's face it, many rooms are simply not suited to a surround sound system, whether the speakers be conventional black cabinets, futuristic silver towers or whatever. And when you get right down to it, most of these surround sound systems are pretty ordinary anyway; with better sound than the TV set but not outstanding.

That is what you should expect in any case because if a system costs less than $1000 yet has a large number of speakers, plus an in-built DVD player, FM tuner and other facilities, they simply cannot be top quality. A pair of good-quality full-range loudspeakers can easily exceed $1000 so a complete home-theatre system costing that or less is bound to be inferior.

Furthermore, I believe that for the vast majority of TV and video programming, surround sound is simply unnecessary. Yes, it might add something to a few "action" movies but otherwise, all those speakers are useless clutter in most lounge rooms.

That is not to say that the sound quality in today's movies and TV dramas is not good. Some of it is very good, especially from those programs produced under the auspices of the BBC. But all you need to enjoy that magnificent wide range sound is a decent stereo amplifier and a pair of equally good full-range loudspeakers. And nor is it necessary to include a separate powered subwoofer – if the main speakers are any good. Whenever I see a subwoofer in use I know that the main speakers are probably deficient in the lower bass and probably the rest of the audible spectrum as well.

So where does that leave our correspondent with his complaint about his new TV? At the moment there is no really satisfactory answer unless you decide to purchase a top-quality stereo or home-theatre system which will cost thousands of dollars. If he already has a good-quality stereo system, the best approach to obtain good-quality sound is to build the High-Quality Stereo DAC project featured in SILICON CHIP last year.

Certainly, that solution is not available to most consumers unless an expensive commercial unit is purchased. The vast majority of people are short-changed as far as sound quality is concerned – but then that applies to all entertainment, not just TV and video. The sad fact is that most people these days simply do not know how good a high-quality sound system can be. SILICON CHIP readers are fortunate in that respect.

Leo Simpson

SOLARKING Monocrystalline 12/24V Solar Panels

Monocrystalline solar panels are designed for long life (up to 20 years) and high efficiency output. These units may be ganged into arrays for applications where high power output is required eg for large battery banks. An excellent solution for remote or mobile power applications, electric fence battery banks, inverter systems, RV's, caravans, boats etc.
All aluminium frames and tempered glass panels allow installation in the most demanding environments.
To prevent moisture ingress, the solar cell modules are laminated between sheets of high transmissivity 3mm tempered glass, tedlarpolyester-tedlar (TPT) material and sheets of ethylene vinyl acetate (EVA).

Stock#:	Max Power	Rated Voltage	Short Cct Curr.	Open Cct.	Dimensions LxWxH	Price
#36994	**10W**	12.0V	**0.56A**	22.0V	396 x 289 x 23	**$49.00**
#36995	**20W**	12.0V	**1.17A**	21.6V	645 x 295 x 25	**$97.00**
#36996	**40W**	12.0V	**2.28A**	21V	645 x 545 x 23	**$193.00**
#36997	**80W**	12.0V	**4.55A**	21.8V	1210 x 540 x 35	**$380.00**
#37873	**120W**	12.0V	**6.82A**	21.8V	1500 x 660 x 35	**$510.00**
#37970	**175W**	24.0V	**4.87A**	45.1V	1508 x 808 x 35	**$760.00**

Features:
*Heavy Duty Mental Frame
*20 Year Limited Warranty
*Monocrytalline Silicone
*3.2mm Tempered Glass

12VDC SMD LED Adhesive Flexible Strips

Specifications:
Width Strip: 8mm
Type: Single Chip
Operation Voltage: 12V DC
Total Draw (5m): 0.9Amp
Power: 48 W
Connection: 2 wire
Minimum cut size: 25mm
Light source: 3528 Top LED
LED Life time: 50K - 100K hours
Power Dissipation per metre: 5W
Operating temperature range: -40°C to +60°C
Storage temperature range: -40°C to +60°C
Applications: Indoor
Viewing Angle: 120°
Weight: 120g

Features:
* Flexible, with a maximum bend diameter of 6cm
* Easy trimming to suit length and easy installation
* 3M double-sided tapes for affixing the strip on application surface

Applications:
* Advertising Panels
* Demonstration cabinets

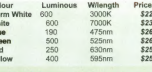

Stock#	Colour	Luminous	W/length	Price/metre
38255	**Warm White**	600	3000K	***$22.50***
38257	**White**	600	7000K	***$23.50***
38258	**Blue**	190	475nm	***$26.80***
38259	**Green**	600	525nm	***$26.20***
38260	**Red**	280	630nm	***$25.80***
38261	**Yellow**	400	595nm	***$25.80***

PowerBright Modified Inverters

Features:
*Anodized aluminum case provides durability & max heat dissipation
*External, Replaceable 30 amp spade type fuses
*12 volt cigarette lighter plug
*Built-in Cooling Fan
*Overload Indicator
Manufacturer: PowerBright

400W 12VDC TO 240VAC

Device:ERP400
Continued Power: 400W
Peak Load Power Rate: < 800W
Dimension (LxWxH): 188x127x51mm
Input Voltage: 12VDC
Output: 240V ~ 50hz
Weight: 2.2 Kg
$47.00
#38118

900W 12VDC TO 240VAC

Device:ERP900-12
Continued Power: 900W
Peak Load Power Rate: <1800W
Input Volts: 10-15V DC
Output: 240V ~ 50hz
Dim.(LxWxH mm): 266.7x127x68.5
Weight: 2.7kgs
$107.00
#37857

1100W 12VDC TO 240VAC

Device:ERP1100-12
Continued Power: 1100W
Peak Load Power Rate:< 2200W
Input Volts: 10-15V DC
Output: 240V ~ 50hz
Dim. (LxWxH mm): 285x72 x147
Weight: 2.7kgs
$129.40
#38119

1500W 12VDC TO 240VAC

Device:ERP1500-12
Continuous Power: 1500W
Peak Load Power Rate:< 3000W
Input DC Voltage Range:10-15V
Output: 240V ~ 50hz
Dim. (LxWxH mm): 294x260x88
Weight: 5.2kgs
$288.00
#38231

2300W 12VDC TO 240VAC

Device:ERP2300-12
Continuous Power: 2300W
Peak Load Power Rate:< 4600W
Input DC Voltage Range:10-15V
Output: 240V ~ 50hz
Dim. (LxWxH mm): 350x260x88
Weight: 6.5kgs
$342.00
#38232

3500W 12VDC TO 240VAC

Device: ERP3500W-12
Continuous Power: 3500W
Peak Load Power Rate: < 7000W
Input DC Voltage Range:10-15V
Output: 240V ~ 50hz
Inverter Weight: 9.5kg
Dimension(LxWxHmm):505x226x154
$390.00
#37938

Solar Charger Regulator

Specifications:
Battery Voltage: 12V
Open circuit Voltage:12V
Continous charge:20A
Maximum charge current:25A
Maximum load current:25A
Operation Current:30mA
Voltage across terminals (PV to Battery):0.8V
Voltage across terminals (Battery to Load):0.4V
Recommended wire size:#12 AWG
Weight:0.47kg
Dimension (WxHxD): 150x85x45mm
Operating Ambient Temperature:-10-50°C

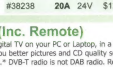

#38998	**20A**	12V	$93.50
#38179	**30A**	12V	$127.50
#38238	**20A**	24V	$127.50

12V 7Ah Deep Cycle Lead Acid Battery

$27.50

Volts: 12V
Amps: 7A
Size: 151 x 101 x 65 mm (LHD)
Weight: 2.58 kg
Standard 6.35mm quicklug terminals

#38236

USB HD TV Turner (Inc. Remote)

With the DVB-T stick you can watch digital TV on your PC or Laptop, in a window or full screen. DVB-T digital TV gives you better pictures and CD quality sound. You can also listen to DVB-T radio in stereo.* DVB-T radio is not DAB radio. Record DVB-T digital TV to your PC's hard disk, playbackyour TV recordings at any time onto your PC screen. This unit also comes with a portable antennae so you canwatch digital TV at home or while you travel with your laptop. Strong reception is required for optimal viewing or a larger on roof antennae would be required for weaker signal areas.

Specifications:
Receiving frequency: TV/4B.25~863.25MHz
Bandwidth6/7/8 MHz Auto-Select
*Fully DVB-T compliant
Package Contents:
*STB10USB DVB-T Stick.
*Portable DVB-T antenna
*Software on CD-ROM
*Remote control.
*Quick Installation Guide

$39.50

#37503

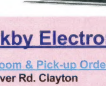

MR-16 3x2 Watt LED Light Warm White

Long life, low heat and low power consumption replacements for MR16 halogen lights. Fitted with 3x2 Watt LEDs.
Colour:Warm white
Lumens: 360
Input: 12V AC/DC

$34.50

#38433

12DC 36 LED MR16 Halogen Lamp

$22.50

Input: 10.5 - 15.8VDC
*Contains 36 Super Bright LEDS
* Long life 100,000 hours

#38271

60° Cree Replacement MR16 Mount LED Light

Colour: Warm White
Power: 3W
LED Type: Cree XR-E 700mA
Brightness:160 lumens
Input Wattage: 3.9W
Input Voltage:12VAC/DC
Lens Angle: 60° wide angle
Dimensions: 50 x 50mm

$23.60

#38273

Standard Definition Set Top Box

Features:
*Standard Definition
*Reception digital TV and radio channels in standard of DVB-T
*RCA, Coxial, CVBS & Component outputs
Freq. Range: 174MHz to 858MHz
Signal level: -65 to -25 dBm
Input Voltage: 100-240VAC 50-60Hz

$19.50

#38341

Rockby Electronics Pty Ltd

For a Free Monthly Mailer Please Contact us

Showroom & Pick-up Orders:
56 Renner Rd. Clayton
Victoria 3168
Ph: (03) 9562 8559 Fax: (03) 9562 8772

Mail Orders To:
PO Box 1189 Huntingdale
Victoria 3166

Internet: **Stock is subject to prior sale**
Web Address: www.rockby.com.au
Email: salesdept@rockby.com.au

ABN# 3991 7350 807
ACN# 006 829 821

MAILBAG

Letters and emails should contain complete name, address and daytime phone number. Letters to the Editor are submitted on the condition that Silicon Chip Publications Pty Ltd may edit and has the right to reproduce in electronic form and communicate these letters. This also applies to submissions to "Ask SILICON CHIP" and "Circuit Notebook".

Electric cars will be the storage element for wind power

I have just finished reading Paul Miskelly's interesting letter (SC, April 2010) on the consequences of the intermittency of wind generation. I note the work devoted to charting the capacity factor of the interconnected wind farms in South East Australia for the month of January 2010 and seek to extrapolate that data to an annualised value, only for the purposes of illustrating an argument on the value of wind power.

In absence of the real data, allow me to assume that the ratio of kWh supplied to hours of wind generator operation is 25%. That is to say, the same energy would be generated by 25% of the installed capacity were it able to operate at capacity for 24 hours per day. From the charts, that seems about right. Assume one further thing – the use of the editor's projected $6 billion worth of possible wind generation which I will round out to 2400MW. The approximations in these assumptions do not detract from the matter of principle I present.

With those parameters, now please allow me to refer to Tim Flannery's comment [i] on the intention by Denmark to use wind-generated electricity to charge batteries for use in a fleet of motor vehicles. The batteries can be charged at parking bays or they may be exchanged at filling stations for recharged units on a plug-in basis.

Tim points out that the myriad of electric-car batteries comprises the storage element so often represented as being unavailable to wind power. He takes it as read that electric cars are inevitable, as would nearly every thinking person, in the light of diminishing oil supplies and exhaust gas pollution from our existing vehicle fleet.

Now the nay-sayers have educated us well as to why this cannot be done. But please allow me the opportunity to spell out how it can!

Assuming that we have 2400MW installed at the assumed annual capacity factor of 25%, we can be assured of 600MW delivery over a full year. So that is the limit for wind power's contribution to electric-car operation.

The undeniable intermittency of such a supply means that for a guaranteed availability of an exchange battery on demand, we must have a battery stock greater by four times than the total electric-car capacity.

That means that regardless of the energy available to charge batteries at any instant, over the long term, there will be enough fully charged batteries available for use. The method by which this aim is achieved is the same as is used today for management of electricity generation and consumption.

Information about the available capacity for each generator site is integrated at market headquarters and the commensurate rate of battery charging can be communicated by load control technology, available and used currently for many purposes, including off-peak hot water, air-conditioner load limiting and so on. Today's smart meters all have the capacity to relay the necessary control information to intelligent chargers. Market operator's seals on the controllers would of course be mandatory.

So there it is – an electric load that uses all the generated power, no matter the instantaneous capacity factor; an electric energy storage system that exactly matches the generation capac-

Plumbers disconnect house earths

I have recently found two instances (a block of five units and a house) where two different plumbers have disconnected the main earth wire from an effective earthing stake, while re-plumbing older properties.

In the latter case, the plumber has installed copper pipe underground from the water meter to the building, then plastic pipe above ground under the house and connected this to the existing copper pipe from sinks etc. The existing earth wire has been transferred from the previous steel pipe to the copper pipe from the sinks, leaving a gap of 5-10 metres to the underground copper pipe. And the wire was just twisted around the copper pipe.

Both plumbers were older, very experienced men who regularly do re-plumbing, so there are likely to be many houses with ineffective earth connections. Fortunately, no accidents have occurred in the 12-18 months since the work was done.

If an older house has been re-plumbed, then I suggest that the owner does the following:

(a) have an electrician check that the earthing from the main board is correct; or

(b) visually check that the earth wire from the main electrical board is connected to a steel or copper pipe at least 150mm above where it enters the ground and that the wire is firmly bonded to the pipe with a clamp, not just twisted loosely around the pipe; or

(c) install an earth stake in a wet area of a garden bed and connect the earth wire to that. Any joins in the earth wire need to be soldered.

Ensure that the power to the electrical board is turned off whilst the earth wire is being handled, in case an appliance is faulty.

J. R. Murphy,
Glen Waverley, Vic.

Comment: this is potentially fatal situation. As you say, after a house has been re-plumbed, the main earth should be checked by a licensed electrician.

ity; and replacement of deleterious gaseous emissions from 600MW worth of motor vehicles. The only reason to require back-up of such generation by gas turbines of open or closed cycle types is to cater for loss of a turbine.

Three counters to this argument exist. First, the requirement of four times the base battery capacity implies a cost burden. The effect will not really be known until the real cost has been agreed and/or the cost of doing nothing is realised. Second, the control needed for optimal results cannot readily be achieved for distributed charging installations, such as in one's garage at home, but the outcomes should justify that shortcoming. And third, my argument has to date ignored current green-power contracts that must be honoured, including those for desalination, but the control information needed for such purposes is all readily available at present and would complicate the algorithms not at all.

Warwick Nichols,
Tea Gardens, NSW.

[i] Tim Flannery, Now or Never, Quarterly Essay Issue 31 2008

Comment: some thinking persons argue that electric cars are far from inevitable as the future of personal transportation. Furthermore, even if electric cars do eventually become commonplace, that will take many years or even decades. In the meantime, there is no effective storage for wind-generated power.

Nor is there any guarantee that all the planned wind power projects will now proceed, following the Australian Labor government's decision to abort the emissions trading scheme (ETS) and the misnamed Carbon Pollution Reduction Scheme (CPRS).

Getting the feed-in tariff is not simple

I would like to share my experiences with installing a subsidised grid-connected solar power system. In November 2009, I responded to an offer by Origin Energy and finally had the system installed in February. Apart from them dropping the price of the system substantially after I signed up (and well before it was installed), I am happy with the work.

The real problem now is that after eight weeks of waiting, Energy Australia has still not been able (or willing) to install a new meter so I can get the generous feed-in tariff. As readers may be aware, a meter change is usually quite a straightforward procedure requiring little more than a few wires being disconnected, the old meter unbolted and the new one reconnected. That should all be possible in about half an hour or less.

Energy Australia is making the meters available free of charge, however, their price for installing them is over $400.00 a pop; a nice little earner for their contractors.

In addition, Energy Australia have decided that installing a FIT meter is a new system and if a switchboard does not fully comply with the latest rules, it must be upgraded to the latest standard, sometimes at great cost to the owner.

In my case, my old meters are too high off the ground for their pygmy meter readers and the whole lot needs

OCEAN CONTROLS
Helping to put you in Control
Control Equipment

Mini DC Motor Controller
Control the speed of any common DC brush motor rated up to 30V and 8A. Features adjustable acceleration time, potentiometer, 0-5V or 4-20mA input signal control. Die Cast Box mounted. **From $69 +GST**

Labjack U3 Data Acquisition Module Features USB connection, 16 Flexible I/O (Digital Input, Digital Output, or 12 Bit Analog Input) Up to 2 Timers, 2 Counters and 2 Analog Outputs. Free Software and drivers **$169.00 +GST**

Industrial Grade Switches and Indicators We now have a selection of 22 mm dia industrial switches and indicators. Screw Connections. **From $12.95 +GST**

Isolated Load Cell Transmitter Convert a signal from a load cell to a 0-10V or 4-20mA signal. Provides 10V Excitation
From $129 +GST

Signal Converter Convert a thermocouple, RTD or 50mV signal to a 4-20mA or 0-10V signal. Non Isolated and Isolated versions available **From $89+GST**

Coming A new version of our popular Arduino compatible USB controller featured in SC April 2010 will feature 8 Relays, 8 Flexible I/O (Digital Input or Analog Input (0-5V/4-20mA). Windows/Mac/Linux compatible . **From $135+GST**

Contact Ocean Controls
Ph: 03 9782 5882
www.oceancontrols.com.au

Mailbag: continued

3D television: an alternative technique

The article by Kevin Poulter on 3D TV in the April 2010 issue of SILICON CHIP was very good and most thorough. However, it did miss out on a very important development.

There is another way to have 3D TV which means that the current 3D TV sets are not the way of the future. You do not need a special TV set to receive excellent quality 3D colour video. Nor active glasses. The one that I am referring to relies on the fact that the eye (and brain) has poor colour distinction. It is a variation of a current method.

The Infitec multiple colour filter system (Dolby) is very adaptable to colour TV. It is a pity that Kevin dismissed it as "not suitable for home use". It can be easily incorporated for use with home video projectors. I have seen a demonstration where the colour filtering was done electronically to the video signal and no modification was needed to the projector. The same currently relatively expensive Infitec glasses were used by the viewer.

It applied a different digital colour filter to each odd line to that for the even lines. These digital filters approximated the optical filters of the Infitec glasses. So the odd lines had the left image and the even lines the right image. This produces an excellent full colour image that does not have any strain effects on the viewer. There is no flickering, with even the normal interlace effects not visible.

It is a better way to go than the active shutter systems that current 3D TVs use. I am one of those people that get headaches from viewing TV pictures using those active glasses due to the left/right flickering and so was very interested in the demonstration.

With all of the interest in 3D TV, a standard needs to be set so that we do not have the current wide variations in the presentation and viewing of 3D TV. In the future there will be a 3D system that does not need glasses but for the present it seems that we will have to put up with them. But which type?

Bruce Withey,
Grafton, NSW.

to be lowered. The rules are that the top of the meter can not be higher than 2m off the ground.

Fair enough, I guess, except that not so long ago, Energy Australia decided to fit the new Smart Meters at my place (not at my request, I might add, although I am happy with the savings I can make). Now, it is these meters that THEY fitted that are too high by about 30cm. That was OK when they did it; now, a replacement FIT meter needs to comply and I need to pay. It beats me how they managed to read those meters for the last couple of years, as I definitely did get my quarterly bills.

However, even if I wanted to pay (which I do not), getting one of those contractors away from their $400.00 simple swap jobs is well nigh impossible. They don't keep appointments once they realise the job will take a bit longer and they simply hang up on you if you ask why. Energy Australia's argument is that it is a "contested service" and you can get any level-2 contractor to do it. Well, try and find one that wants to compete when they have work coming out of their ears.

Name & address supplied but withheld at writer's request

Live transformer cores extended portable battery life

In regard to the topic of loudspeaker transformers with their laminations connected to the HT, I just thought you may be interested to know that one of the main reasons for this was to extend their life in battery radios.

In some battery-powered radios, the main switch only turned off the valve filaments but left the B battery (HT) connected. This had the result that the HT voltage (90V or 120V) remained permanently connected to the speaker transformer and could cause a galvanic reaction if the windings were not extremely well insulated.

In the "old days" moisture from the

person's hand when handling the transformer wire was often blamed for enhancing the chance of corrosion and consequent breakage of the very fine wire.

By connecting the high-voltage winding to the core, there was no longer the chance of a galvanic reaction happening as there was no potential gradient between the core (which, in conventional transformers, was earthed to the chassis) and the HT windings. Also, of course, potting the whole thing in bitumen helped to reduce moisture ingress as well.

Chris Ross,
Tuebingen, Germany.

The last word on "hot' speaker transformers!

In my youth in the 1960s I was an apprentice at a radio and TV sales and service shop. My boss, Keith, became worried at the number of speaker and vertical output transformers we were replacing, almost all in Astor brand television receivers and radios made by Radio Corporation in Melbourne. Early model Astor TVs could be expected to require around two or three vertical output transformers in their lifetime.

In those times, almost every part of a TV was made "in house". Astor (and most other Australian manufacturers, with varying degrees of success) made various transformers (power, vertical, speaker, RF and IF) and the line output transformer that generated the EHT. They made assemblies like the tuner and deflection coils and potentiometers, small components such as valve sockets, tagstrips and fuseholders, all plastic parts (knobs, dials, picture tube masks, cabinets, etc) and all metal parts (chassis, tube mounting components etc).

At this time they did not make capacitors, resistors or valves but through associated companies did make the picture tubes, the wooden cabinets and even the dial light bulbs! Coincidentally, Keith was invited on a tour of AWA's manufacturing facility, I think in Sydney. There he learnt AWA's theory on the failures. This was that minute "pinholes" in the enamel insulation of the transformer winding wire allowed small leakage currents from the winding, at a potential of about 200V DC, through the paper insulation to the grounded core.

This resulted in "electroplating" of the copper wire to the core, eroding the thin wire until it was open circuit. It appeared that the Astor insulation over time absorbed moisture more than other brands, allowing increased leakage.

AWA tested the winding wire by running it through a bath of mercury, allowing the pinholes to be counted, (there was a conductive path through the mercury to the wire if the enamel was defective). If a failed transformer was examined, the wire would be seen to have "dissolved" into green copper oxide at the fault site. Raising the potential of the core to the same as the winding prevented this leakage. As mentioned in other readers' letters, Rola and other manufacturers of speaker transformers did this and then potted the transformer safely in a can.

Specialist loudspeaker drivers from:
GERMANY
VISATON®

With over 40 years of experience in acoustics and speaker technology, Visaton are a market leader. They offer a huge range for almost any speaker project. Comprehensive data is available online. Ph. (02) 4627-8766 or (03) 9859-0388

- Drivers up to 15"
- Fullrange & wideband
- Miniature & shielded
- Horns & coaxial drivers
- Hifi - DIY - Projects
- Communications
- Public Address
- Manufacturing

soundlabs GROUP
www.soundlabsgroup.com.au

into VIDEO/TV/RF?

There's something to suit every RF fan in the SILICON CHIP reference bookshop; see the bookshop pages in this issue

Television & Video Technology – by KF Ibrahim
New edition has a full and comprehensive guide to video and TV technology including HDTV and DVD, starting with fundamentals.
$70

Practical Guide To Satellite TV – by Garry Cratt
The book written by an Aussie for Aussie conditions. Everything you need to know – including what you cannot do!
$49

RF Circuit Design – by Chris Bowick
A new edition of this classic RF design text - tells how to design and integrate RF components into virtually any circuitry.
$75

DVD Players and Drives – by KF Ibrahim
DVD technology and applications - ideal for engineers, technicians, students, installation and sales staff.
$95

Hands-On Zigbee – by Fred Eady
An in-depth look at the clever little 2.4GHz wireless chip that's starting to be found in a wide range of equipment from consumer to industrial.
$96.50

Practical RF H'book – by Ian Hickman
A reference work for technicians, engineers, students and the more specialised enthusiast. Covers all the key topics in RF that you need to understand.
$90

• Audio • RF • Digital • Analog • TV • Video • Power Control • Motors • Robots • Drives • Op Amps • Satellite

Mailbag: continued

Flat panel TVs do not have analog audio outputs

My son-in-law recently purchased the latest Samsung Series 8 LED TV and asked me to help him install it. When he and my daughter were at the retailer negotiating a "deal" they rang me asking advice, as the salesman was trying to get them to also purchase a BluRay player, a 5.1 channel sound system, PVR HD recorder, extra 5-year warranty, surge protector, wall-mount kit etc, adding an extra couple of thousand dollars to the purchase price.

My advice was that as they already had a perfectly good DVD player then why not use that until BluRay prices come down (as they will in a year or two). And as they have a perfectly good analog hifi system, why not use that for sound?

I suggested that they ask the salesman if the TV had an AV output and he reassured them that it did, so they completed the sale and brought the set home. They then installed the set, only to find that the only sound output was optical, ie, no AV out and no headphone jack. So much for the reassurance from the salesman.

The set sounds awful, with rear-mounted speakers, so the only solution now is to buy a 5.1 set-up. Why don't manufacturers provide an AV out so we can use our existing and expensive stereo set-ups or provide speaker jacks or at least headphone jacks?

Are you considering doing an amplifier kit with optical inputs or is there an interface that could be used with these new LED TVs which only have optical audio outputs?

The other issue with using the optical output to an external amplifier is that the set's remote control is rendered unusable for volume and therefore another remote is required. Are we going backwards?

Bruce Piper,
Wynnum North, Qld.

Comment: it appears that all late-model flat-panel TV sets do not have analog audio outputs; just the optical output that you have found.

It seems quite likely that there are no analog audio signals inside the set either, as the audio amplifiers themselves are probably digital. The only place where analog audio would exist is across the loudspeaker voice coils. Hence, your dealer was right to recommend the purchase of an accompanying home theatre system because that is presently the only way to get half-decent sound.

If you want to connect audio outputs to an existing stereo system, the simplest and easiest method is to use a digital-to-analog converter (DAC) such as the Jaycar Cat. AC-1603 or the Altronics Cat. A3199 (both $69.95). We haven't tested these devices and they still have the drawback that your TV's remote will no longer control the sound level.

Alternatively, for a high-quality stereo DAC, take a look at the unit described in SILICON CHIP (September – November 2009). Altronics has a complete kit (Cat. K5332) for $299, while Jaycar has a shortform kit (Cat. KC-5487) for $139.00

Business was so good replacing Astor transformers that "after market" brands became available at cheaper prices than original parts. Keith decided that when replacing Astor vertical output transformers we would isolate the transformer on plastic stand-offs and connect the core to the HT supply. A number were isolated and it worked very well with, as I recall, no more failures of the modified transformers. It did, however, provide the possibility of a surprise for other technicians.

As a footnote, the owner of the business was not too keen on the modification, arguing that replacing the transformers returned a good profit.

Bryce Templeton,
Bonogin, Qld.

High appreciation for SILICON CHIP

I had a need for a 12-36V DC-DC boost converter to run a string of Christmas lights, supplied originally from a 35V 1.25A AC plugpack. I constructed your 12-24V DC-DC Converter (June 2003 and adjusted the pin 5 resistors on the MC34063 IC down to about 680Ω to increase the output to 36V. It worked but voltage regulation fell off dramatically past 600mA output current – not up to the job, unfortunately.

Then I read your working solution to "Laptop Needs More Power" in the April 2010 "Ask SILICON CHIP" column and beefed up the components accordingly. The two stacked cores were wound with 30 turns of 1.25mm copper – a feat in itself – to produce a measured inductance of 160µH. The fast recovery diodes were replaced with 45V 15A Schottky diodes from Jaycar and all power components were placed on larger and more robust heatsinks, as recommended.

I am pleased to report that the final product has been bench-tested and performs excellently for my needs.

The converter produces an output of up to 1.3A regulated at 36V from a 13V battery, drawing 4.5A. With an efficiency around 80-81%, a power output of around 45-50W and all power components passing the "warm finger" test, I am very happy. Thanks once again SILICON CHIP.

The clarity of your projects, circuit analysis and detailed instructions has no doubt contributed immensely to the success story of your magazine, particularly for those who like to experiment and/or modify a proven design – like me and probably most everybody else! Keep up the good work.

I also read Sanjaya Maniktala's book "Switching Power Supplies A to Z" (purchased from SILICON CHIP) to obtain a better understanding of switch-mode converters. Although the maths is quite formidable, the early chapters were easy to read and very helpful in understanding the relevant concepts as they pertained to my needs. I would recommend the text to anybody in similar circumstances.

Colin O'Donnell,
Glenside, SA.

Are fluorescent lights harmful to your eyes?

Following your article on upgrading fluorescent lights in the May 2010

issue, I would be interested in your opinion on the two following quotes from the book "Improve Your Eyesight Naturally" by Leo Angart:

From page 123: "Speaking about light, the worst light source you can use for work or reading is fluorescent light tubes. Fluorescent light typically produces a rather distorted spectrum of light. For example, cool-white fluorescent light, the most frequently used, is deficient in red and blue-violet colours, the area where natural sunlight is strongest. Also, fluorescent light casts very few shadows. These are important for the eye in order to determine shape. In uniform light your brain has to work harder to detect the shape of objects. In addition, fluorescent tubes contain only half of the colours compared to daylight and they also tend to flicker, thus leading to eye strain. This is especially prevalent in areas where the level of power supply is fluctuating".

From page 125: "A study was carried out comparing the visual effects of different lights on the printed page. Sunshine reflected from a white printed page at noon on a clear day registered 1,300 foot candles (1 foot candle is the light from one candle at the distance of one foot). In the outdoor shadow the reflection was reduced to 130 foot candles.

"Indoors, a 150-watt reflector spot bulb registered 130 foot candles, the same reading as outdoors on a sunny day. A 60-watt bulb at the same distance registered only 2 foot candles, reflected from the same page. Indirect light by a 300-watt bulb thrown off the ceiling measured only one-half foot-candle. Fluorescent light registered about a quarter foot-candle. No wonder fluorescent light is so tiring."

George Briansky,
Emerald, Vic.

Comment: our first reaction was "What a lot of rot!"

It is true that fluorescent lights or indeed any light source apart from the Sun do not have an even spectrum. That is why their "colour rendering" is not the same as white light. Older fluorescent lights have a distinct greenish tinge but the new "cool white" tubes are pretty good for colour rendering. Does your brain have to work harder under fluoros in order to detect shape? Heaven forbid! In fact, it is only in poorly lit areas that you have trouble discerning shapes.

Fluorescent light is good because it produces very few shadows, just the same as open cloudy or overcast skies. Flicker can also be a problem when a fluorescent tube is first turned on, until it warms up. After that, flicker is usually imperceptible. If a tube does have noticeable flicker after it has warmed up, it is probably old and should be replaced.

It is also true that sunlight is much brighter than any other light source but have you tried to read a book or newspaper in full sun? Without sunglasses? It is quite painful. It is definitely not good for your eyes and that is without mentioning the harmful effects of ultraviolet radiation.

Apart from incandescent lighting, modern cool white fluorescent lights such as the NEC quad phosphor types featured in our May 2010 issue on office/factory lighting, are probably the

DAB+ quality is adequate

I may have been a bit too critical about DAB+ audio quality in my letter published in the March 2010 issue of SILICON CHIP and freely admit that DAB+ audio quality, with the exception of ABC Classical, is adequate and perfectly acceptable.

I personally consider the audio quality of ABC Classical as broadcast on FM as a "benchmark" but unfortunately on DAB+, the transmission quality, while quite acceptable, lacks the subtle details and ambience noticeable on FM or from good CD recordings.

Unqualified statements made by some politicians and broadcast industry people that DAB+ is "better than CD quality" or "better than old-fashioned analog FM" (or to "listen to that beautiful digital sound") do not sit well with me.

In strong signal areas covered by DAB+, reception is "rock solid" and free from interference, fade-outs and multipath distortion, with audio quality about the same as from the majority of FM stations and noticeably better than from AM stations.

To qualify my earlier criticisms, I do listen to live, non-amplified music (including classical concerts) whenever possible, to maintain my perception of how such music really does sound.

To preserve my hearing, I do not listen to loud pop music using cheap "ear buds" driven from an MP3 player, nor do I have a 500W amplifier and "boom box" fitted in my car.

All audio compression is based on the principle of discarding or throwing away subtle audio details which, it is presumed, will not be noticed or missed by the listener. The lower the "bit rate", the more information is discarded, resulting in lower audio quality.

The lack of audio details may not be noticeable to some listeners, particularly if listening to cheap low-quality speakers, cheap headphones or worse, cheap $2 ear buds.

However, listening to classical music on high-quality speakers does reveal differences and lack of details as currently broadcast by ABC Classical on DAB+. This is particularly noticeable on complex music such as chorus singing, massed strings and piano string decay.

It is also noticeable as an audible difference in the concert hall acoustics and less important, a difference to the sound of applause and studio or concert hall background noise.

One interesting benefit provided by audio compression is to ABC JJJ in Perth where faint hum, about 30dB to 35dB down, is noticeable during announcements on FM, but not present on music. Thanks to audio compression, this hum is not noticeable on DAB+.

To conclude, raising the bit rate on DAB+ for ABC Classical would raise the audio quality to something as good as the "old-fashioned analog FM" and justify the political statements referred to earlier.

Poul Kirk,
South Guildford, WA.

most benign form of artificial lighting available. Nor do they emit ultraviolet.

Those other lights which are beloved of interior decorators, halogens, do emit ultraviolet light and if they are used in close proximity to your eyes, as with some desk lamps, they can be harmful.

By the way, measuring light output in foot-candles is archaic. The correct measure is lux.

We would toss the book concerned in the bin.

Colour temperature is measured in Kelvin

Whilst perusing my May 2010 copy of SILICON CHIP, I read the article on reducing the office lighting bill with interest. On the whole I found the article to be very informative.

I just wish that I was in a position to do something about the lighting in the office where I work; I'm employed by the government. We seem to be able to spend money on what I would classify as environmental "fads" but won't pay for something less sexy, like reducing our lighting bill. I guess that's between us, the building owner, the building manager and a bunch of lawyers.

Anyway I noticed in the text of the article that you refer to the colour temperature of the fluoro tubes in "degrees Kelvin" whereas it should be just "Kelvin" (K), as the SI unit for temperature is "Kelvin". I hate to nitpick but this is one of my pet hates, much like redundant apostrophes and incorrect capitalisation of SI prefixes like K for kilo, etc.

About 10 years ago, Channel 7 (Perth) introduced a new "graphic" which preceded their weather bulletin. The graphic was a rotating Earth as seen from space and presumably intended to highlight the technology/accuracy of weather forecasting. The only problem was that it was rotating the wrong way.

Normally, I couldn't be bothered reacting and this was the first and only time. But as they'd recently broadcast a news article about some international year of scientific endeavour, I rang the Perth studio to complain.

When I was finally put through to a person and explained my complaint, I was told that: (1) I was the third person to call, (2) it would cost too much to fix and (3) the graphic was intended to simulate a view of the Earth from a satellite in geosynchronous orbit.

Incidentally, this email is written on my 24-inch iMac using Thunderbird. I've used Thunderbird pretty much since it came out. The beauty of this particular email client is that I've been able to use it on computers running Windows, Linux and OS X (obviously different binaries) and it is relatively straightforward to move the actual email and contacts between hosts.

I'm a recent convert to Apple, having grown up in the DOS world. Many email programs only run on one platform and it can be very difficult to convert email from one type to another.

Walter Hill,
Mt Pleasant, WA.

Comment: this gave us a really good laugh on a Monday morning. Anyway, why couldn't they simply run the video clip backwards? SC

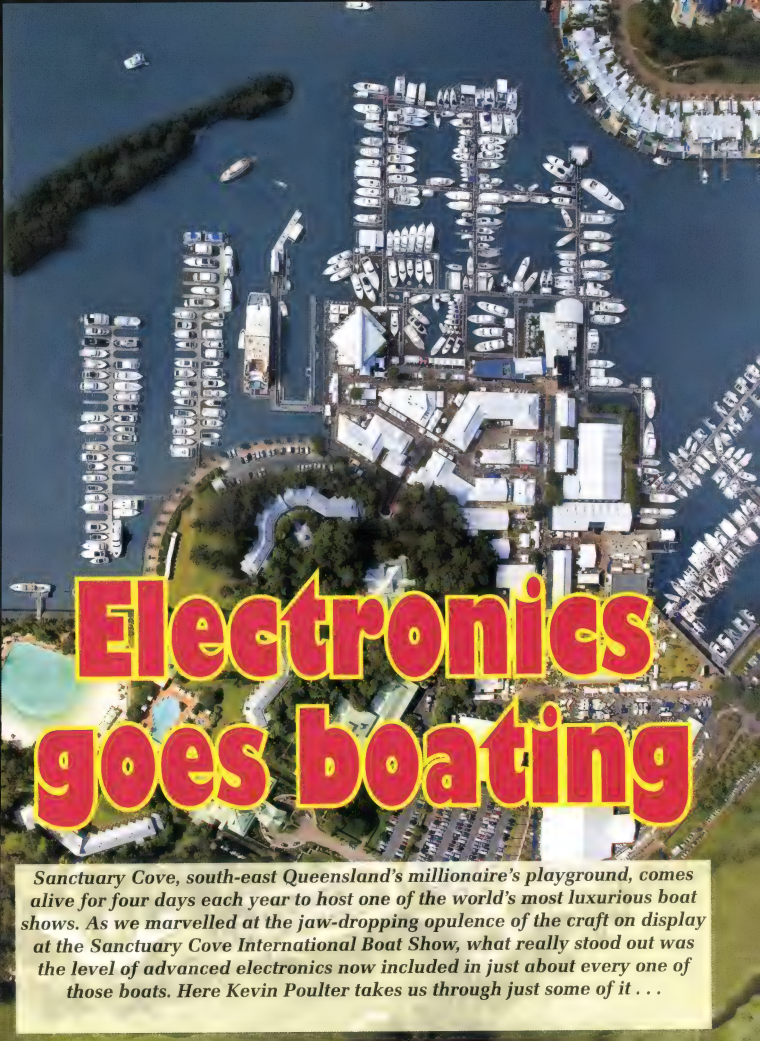

Electronics goes boating

Sanctuary Cove, south-east Queensland's millionaire's playground, comes alive for four days each year to host one of the world's most luxurious boat shows. As we marvelled at the jaw-dropping opulence of the craft on display at the Sanctuary Cove International Boat Show, what really stood out was the level of advanced electronics now included in just about every one of those boats. Here Kevin Poulter takes us through just some of it . . .

Gone are the days of limited instrumentation with hard-to-read dials and gauges. Now it's all glass, with multi-function LCD panels giving everything from engine parameters, fuel usage, boat speed and electrics through to radar, sonar, navigation (including GPS) and even computer graphics and TV programs if you wish!

Visitors from around Australia, indeed the world jet in to see a mouth-watering array of motor yachts and accessories from 424 exhibitors. Anything the mind can conceive for marine is presented to everyone with 'salt in their veins'.

The show's general manager, Barry Jenkins, said there were close to 200 boats on the water: multi-million dollar super-yachts, sail boats, luxury cruisers and sport fishing boats. If placed bow to stern, these boats would stretch close to 3km.

'On land, we estimate there were hundreds more boats, mainly trailerable,' said Mr Jenkins. It's difficult to describe the atmosphere, with thousands of visitors and small plus large boats many can only dream of, huge temporary halls dominated by electronic gizmos, helicopters ferrying visitors every few minutes – the whole area abuzz with excitement.

Thanks to innovative control and harnessing of electrons, life on the water is becoming immensely safer, more relaxed and more fun. Remember when you went fishing and eventually found a great spot or reef where the best size fish were abundant? If close enough to shore, a few landmarks would be noted and visually triangulated for future fishing expeditions.

In reality, the 'guessing landmarks' location method could be a kilometre or more inaccurate. Now for under $200, a hand-held GPS will locate the position any time within a few metres!

And if you are unlucky enough to get into difficulties out at sea, then affordable equipment (EPIRBs, etc) will enable the Australian authorities to know where you are, again within metres, and the 'cavalry' will come to the rescue.

At the show, a myriad of brands displayed lighting based on highly efficient LEDs, proven now to be so successful. I looked directly at one bank of LEDs and was so dazzled by their extraordinary lumens, I saw 'spots' in my eyes for quite a while afterwards.

Electronic gear for marine use has one major difference to land – it must be able to withstand the highly corrosive elements, for example, marine entertainment cannot simply be a car stereo painted white.

If you love electronics, the Sanctuary Cove Boat Show is the CES on water. There is a feast of all things electronic, such as:

- A huge diversity of navigation and depth-sounders – some with the ability to display the engine's instruments, selectable through a menu and/or via touch-screens
- Broadband radar (that the US Military would not approve for sale to private boaties until a detection system was devised)
- Autopilots
- Thermal-imaging cameras for night vision
- Pure sinewave inverters
- LED lamps for above and below the waterline
- Desalination systems
- Cooking systems – full kitchens
- BUS / CAN technology
- Communications and on-board audio/video entertainment gear

Today's power and sailing boats are the epitome of luxury and comfort, with equipment only dreamed of with a few years ago. And thanks to competition between (mainly) Chinese manufacturers forcing prices down, all this is becoming more and more affordable for even the average boat owner.

- Electronic anti-fouling and anti-corrosion
- All manner of instrumentation and fly-by-wire control
- Joystick control of stern-drive engines and side-thrusters
- Winches that raise and lower anchors at a flick of a switch (no longer the domain of motor yachts but expected by many trailer boat owners too)
- Zoned air-conditioning and
- Advanced refrigeration

In today's supersonic-pace world, nothing should surprise electronics users. While one company is saying 'it can't be done', another is releasing the technology.

iPad marine mount

For example, during the show, Apple's iPad was a week away from arriving in Australia, yet a 'world's first' iPad mount was displayed by a talented Queensland engineer, Gary Pacey.

The Outback Marine Australia holder enables the iPad to be mounted on the boat's bridge or bulkhead, as a back-up navigation aid plus access to all the features iPad offers, like messages, weather updates, video, music source and surfing the web. Maps can be as low as US$50 each.

OMA's custom holder for the new iPad which is individually CNC-machined to order.

Given that the iPad was not released in Australia at the time, how was this Aussie coup achieved? An iPad was purchased in USA and the holder 'mould' machined on an Australian CNC machine.

As a specialised product, demand will be a relatively small, so for around $250, every one sold will be custom-machined on the CNC! When these holders are seen, consumers will adapt them for many other uses, in the home and other non-marine applications. The holder offers security and convenience – removing the iPad is a breeze, just unclip it and take it with you.
www.shopoma.com.au

Chinese value

Most of all, the quality and finish of boat electronic installations often surpasses those in fabulous homes. If there is something you need to make your boat more attractive or functional – it's available – and prices have plummeted. Traditional high-quality electronics manufacturers are finding strong competition from Chinese production, with prices as low as ten percent of similar European products.

One boater I met related how he purchased a number of LED lamps

from China and one didn't work. He contacted them and they sent TWO replacements, with a profuse apology!

I inspected a seventy-five foot motor yacht made in Shanghai, for sale at over A$4 million and it was nothing short of impossible-to-fathom luxury.

Dominating the eye-candy was sumptuously deep gel-coated wood-grain in styles and finish far superior to the most stunning house. Beyond words. The electronics were discretely hidden (stealth installation) but electrons were harnessed as the heart and soul of the vessel's operation.

This was a dazzling certification of what China can do, however we all know not all their products are in the same league. So where does this leave Australian electronics manufacturers, if they are overwhelmed by low prices?

The best opportunities for Aussies are found when we don't compete against international giants 'head-on', rather provide innovation, unique specialised technology, plus 'local-need' products. Also if the product is large, we don't have the burden of sea-freight cost.

Fusion Electronics marine entertainment systems are somewhat surprisingly designed in New Zealand and fast becoming a world market-leader.

Entertainment

There are some exceptions, like Fusion Electronics. Their marine entertainment systems are designed in New Zealand for world-wide release, especially in Australia, UK and USA and are so advanced, they gain market-share against other long-standing international giants.

For example, they harnessed multi-layer PC boards and class-D amplifiers to produce a unit that is probably the smallest footprint in the market for the features, yet delivers 200 watts max. throughout a large vessel or trailer-boat. Obviously the entire case is a heat-sink!

This much power is not always needed but in a noisy environment and with multi-zone speaker systems, it's good to have a reserve of power. Fusion's technical expertise will be discussed further in the next edition, however suffice to say their iPod connection and VHF marine reception features are also of great interest to boaters.
www.fusionelectronics.com

Joystick control

Cummins MerCruiser Diesel has the Zeus Pod propulsion system, which is now available with 715 hp engines in triple and quadruple installations up to a whopping 2860 hp. CMD's innovative Zeus pod-drive system offers joystick control at slow speeds.

The joystick controls the drive-by-wire steering, throttle and shifting in an intuitive manner, so simple hand movements are translated into vectored thrust and complex boat manoeuvres that were hitherto impossible.

Now, a novice boater can move even a 30m (100ft) yacht dead sideways or diagonally, or spin it in the boat's own length, making docking dramatically easier, even when strong winds and currents are present. The system also offers integrated autopilot functions, such as waypoint tracking and auto-heading as standard features. Skyhook, which maintains boat position and heading with the touch of a button, is also a standard part of the Zeus package.
www.cummins.com

Volts and amps

Need some power on board? Welling and Crossley's Paguro 5000 marine generator delivers. The Italian-manufactured generator is compact, lightweight and powerful, delivering up to 4kW (5kVA) of continuous, clean 230V AC power and can peak up to 48 amps to cope with switching surges, all in a unit weighing only 83kg. Operated via an easy-to-use remote control panel with hour-meter and unique proportional load-meter, the Paguro 5000 comes with an automatic shut-down safety feature when low oil pressure or high temperature is detected.
www.wellcross.com.au

Solar power was a big feature, with many craft displaying not only large panels but also the electronic "smarts" to control them and their batteries. Inverters were also big news at the Sanctuary Cove show.

Green power too

Yachtsmen like clean green energy and this is available from Applied SolarWind Solutions' range of solar and wind products. Originally established to provide photovoltaic applica-

tions to industry on a large scale, the company also provides products specifically designed for the recreation and marine industries. ASWS displayed its Flexcell 'Sunslick' range of solar chargers, designed for the marine market, offering a seven-watt portable/flexible panel for smaller craft with a requirement to trickle charge a single battery. Larger craft can use the 14W or 27W panels. The 27W panel will charge a 12V lead acid battery in four to five hours in full sun. Two other Flexcell solar chargers are offered including Sunpack, a flexible roll-up version for personal use when camping and trekking, which can be used to charge mobile phones and GPS devices.

Their Forgen Vertical Axis Wind Generator has no propeller blades and operates silently. The Forgen is designed to trickle charge batteries in marine craft without disturbing the boat occupants or their neighbours. In late 2010, the company will manufacture in Australia Sun Tracking Solar Concentrators and the Australian branch is looking for distributors.
www.appliedsolarwindsolutions.com.au

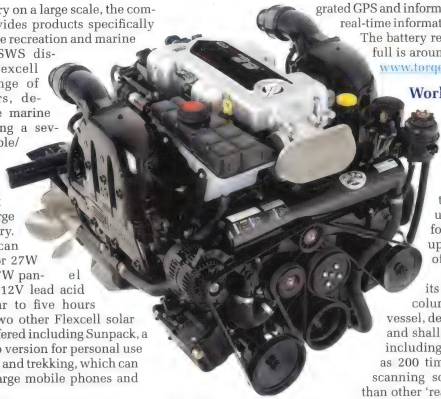

Mercury's new 8.2 litre "Big Block" V8 stern-drive engine has multi-point EFI, delivers 380 hp and weighs in at 490kg.

Saving fuel

Marine 'petrol-heads' will be impressed by Mercury MerCruiser's 8.2-litre, naturally aspirated big block motor. Plus, Mercury's electronic technology, like their ECO-Screen. The ECO-Screen tells drivers how to obtain the very best fuel economy for every trip.
www.mercurymarine.com.au

Electric too. . .

Torqeedo's Electric Outboard opens new power options. Their Travel 1003 is recommended for vessels up to 1.5 tonnrs – but don't expect to break speed records.

It's waterproof to IP67, so all components can be submerged for one hour at one meter below the surface without damage. According to Torqeedo, the integrated GPS and information system means precise, real-time information on battery charge status.

The battery recharge time from empty to full is around seven hours.
www.torqeedoaustralia.com

World's best?

Coursemaster Autopilots released their Ultrascan PC90, a new Multi-beam, Forward-Looking, Sonar technology from Interphase Technologies. Coursemaster Autopilots describes the unit as the world's fastest forward scanning sonar that updates instantly at the speed of sound.

The unit demonstrates its ability to 'see' the water column and sea floor ahead of a vessel, detecting dangerous obstacles and shallowing. It offers capabilities including the ability to be as much as 200 times faster than mechanical scanning sonars and 20 times faster than other 'real time' sonar systems. The Ultrascan PC90 captures the entire field of view in a single ping, puts it in a memory and then simultaneously creates all the beams from the memory at once. At a 30m range, for example, it can provide the navigator with up to 24 full 90° scans per second.

Wireless data

Tacktick Ltd's new wireless speed and depth instruments are perfect for yachts 35ft and under and offer simple installation and easy set up calibration.

There's no need for complex wiring as the data is wirelessly transmitted around the boat. The displays can be self-installed, saving labour costs. The Tacktick Entry Level displays offer 38mm readouts, backlighting for night sailing and are completely waterproof to 10m ensuring no condensation.
www.coursemaster.com

This Mercury economy gauge on a US boat is showing 3.6 miles per US gallon at 29.2 MPH @ 3160 RPM (65l/100km and 47km/h!).

Breathe easy

Dometic Group displayed three new products for the Australian market. The portable Breathe Easy air purifier eliminates unpleasant cabin odours and airborne contaminants, such as mould spores, bacteria and fumes.

The manufacturer says it re-

duces volatile organic compounds by 57% and formaldehyde levels by 41% within a six-hour period.

It uses photocatalytic nano-mesh technology to transform airborne contaminants, providing fresher and healthier air onboard. The purifier is powered by 12V DC or 115V/230V AC via a transformer that's included with the product.

www.dometic.com

AIS and radio antennas

Australian communications company GME has increased their antenna whip range with new whips of four foot length, compatible with AIS, 27MHz, broadcast and VHF devices.

The new whips are interchangeable with any of the bases. Replacement of broken or damaged whips is simply a case of unscrewing the old whip and screwing in the new one.

www.gme.net.au

Even the humble winch has now gone hi-tech with wireless remote control, assisting solo or short-handed sailing from the cockpit.

Stay in touch with fleet broadband

Furuno's Inmarsat fleet broadband Felcom 250 offers simultaneous access to voice and high-speed data communications with global coverage, provided through three Inmarsat-4 satellites.

Fleet Broadband brings ship-to-shore and ship-to-ship operational and social communications into the broadband era.

Intellian, the T-110 and T-130 3-axis stabilised satellite TV antenna systems provides a rock-steady satellite signal reception even in the harshest conditions at sea. It has a built-in global satellite library and can receive TV service from multiple satellites around the globe.

And a further launch was FLIR's M-series multi-sensor maritime night vision system. FLIR thermal imagers allow the user to see in total darkness.

www.furuno.com.au

Touch screens

Raymarine showcased the E Series Widescreen with HybridTouch. The widescreen display offers both touch screen and hard button control.

Touch screen operation has the advantage of being quick and easy, but it can be challenging to use in rough weather or when moving at speed.

www.raymarine.com.au

Desalination

R Electronics launched the Seafari Versatile by US manufacturer HRO systems. This desalination water-maker unit has a remote mounted control cube, which allows for greater flexibility during installation of the unit.

www.relectronics.com.au

Remote monitoring

Smart1Marine debuted its new boat monitoring device, the Yacht Sentinel. This is a comprehensive onboard monitoring system, which allows a boat owner to make essential checks on the boat simply via a mobile phone. 'There are a myriad of problems that can arise when we are sitting at home leaving a boat unprotected, like theft, storms, flooding or power outage', said spokesperson Dee Jones.

www.smart1marine.com.au

Sonar too!

TMQ released several new products at Sanctuary Cove including the Echopilot three-dimensional Forward Sonar, which displays a three-dimensional representation of the underwater scene ahead of a vessel.

According to TMQ, the seabed terrain and potential hazards are shown with unparalleled realism. Twin retractable-transducers ensure complete forward coverage whatever the hull form.

The view ahead is 60° in the horizontal plane over 90° in the vertical plane. Forward range is up to 200m.

www.tmq.com.au

Raymarine's E-series touch screen display here showing both radar and GPS images. But it's capable of a wide range of inputs to display just about anything you want.

And so much more!

See the next issue of SILICON CHIP for a closer look at some of the amazing technology invented for marine. SC

FANTASTIC GIFT IDEA FOR STUDENTS OF ALL AGES!

THE AMATEUR SCIENTIST

An incredible CD with over 1000 classic projects from the pages of Scientific American, covering every field of science...

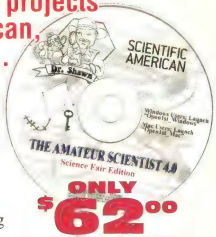

NEW VERSION 4 - JUST RELEASED! GET THE LATEST VERSION NOW!

Arguably THE most IMPORTANT collection of scientific projects ever put together! This is version 4, Super Science Fair Edition from the pages of Scientific American. As well as specific project material, the CDs contain hints and tips by experienced amateur scientists, details on building science apparatus, a large database of chemicals and so much more.

ONLY $62.00

PLUS $10 Pack and Post within Australia

NZ P&P: $AU12.00, Elsewhere: $AU18.00

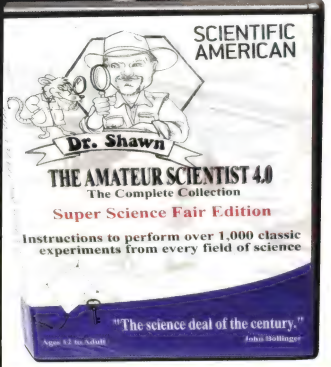

"A must for every science student, science teacher, science lab . . . or simply for those with an enquiring mind . . ."

Just a tiny selection of the incredible range of projects:

• Build a seismograph to study earthquakes • Make soap bubbles that last for months • Monitor the health of local streams • Preserve biological specimens • Build a carbon dioxide laser • Grow bacteria cultures safely at home • Build a ripple tank to study wave phenomena • Discover how plants grow in low gravity • Do strange experiments with sound • Use a hot wire to study the crystal structure of steel • Extract and purify DNA in your kitchen •Create a laser hologram • Study variable stars like a pro • Investigate vortexes in water • Cultivate slime moulds • Study the flight efficiency of soaring birds • How to make an Electret • Construct fluid lenses • Raise butterflies as experimental animals • Study the physics of spinning tops • Build an apparatus for studying chaotic systems • Detect metals in air, liquids, or solids • Photograph an ant's brain and nervous system • Use magnets to make fluids into solids • Measure the metabolism of an insect . . . • and many, many more (a thousand more, in fact!)

See the V2 review in SILICON CHIP, October 2004. . . or read on line at **siliconchip.com.au**

This is the ALL-NEW Version 4 . . . it's even BETTER!

HERE'S HOW TO ORDER YOUR COPY:

BY PHONE:* (02) 9939 3295 9-5 Mon-Fri

BY FAX:# (02) 9939 2648 24 Hours 7 Days

BY EMAIL:# silcon@siliconchip.com.au 24 Hours 7 Days

BY PAYPAL:# PayPal silcon@siliconchip.com.au 24 Hours 7 Days

BY MAIL:# PO Box 139, Collaroy NSW 2097

BY INTERNET:^ siliconchip.com.au 24 Hours 7 Days

^ Please have your credit card handy! # Don't forget to include your name, address, phone no and credit card details. ^ You will be prompted for required information

There's also a handy order form inside this issue.

Exclusive in Australia to: **SILICON CHIP** siliconchip.com.au

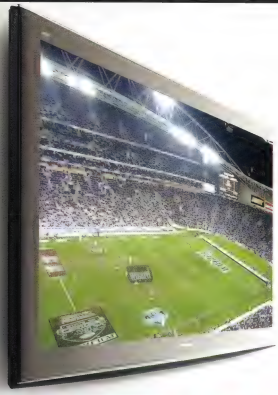

3DTV: From Stadium to Living Room

Australia's Channel Nine and SBS (Special Broadcasting Service) are collaborating to broadcast live, in high-definition 3D, the three State of Origin rugby league matches (produced by Nine) and 15 World Cup soccer games (produced by FIFA) between May 26 and July 12 this year. This has been timed to coincide with the recent Australian consumer launch of 3D-capable high-definition television sets.

These broadcasts are possible due to a two month experimental broadcast license covering transmitters in Sydney (Gore Hill), Melbourne (Mt Dandenong), Brisbane (Mt Coot-Tha), Adelaide (Mt Lofty), Perth (Bickley), Newcastle (Cooks Hill & Charlestown) and Wollongong (Knights Hill). These broadcasts are made on a variety of channels but in all cases the trial is available on digital channel 40.

Some areas will unfortunately be left out due to the limited number and range of the transmitters being used for the trial. One of the purposes of the trial is to assess consumer interest when major live sports events are made available.

Making such broadcasts involves new technology virtually every step along the way – from the cameras at the game, to the processing and broadcasting equipment at Channel Nine's headquarters and ending with the reception and display of 3DTV in viewers' homes.

On Wednesday, 19th May 2010, Nine Network Australia and SBS Corporation began the first free-to-air 3D television broadcast in the world. We take a look at the technology involved in getting 3DTV live from the sports field to your home.

by Nicholas Vinen

To assist with these new challenges at the production end, a technical team was brought in from California. The Burbank-based company "3ality" (pronounced "three-ality") have provided 3DTV production equipment and a great deal of expertise, putting the Channel Nine team on a crash-course in 3D television recording and production.

3D cameras

We have already covered 3D camera technology extensively in "3D TV Is Here At Last!" (April 2010) and "Breakthrough Aussie Innovation: Making 3D Movies" (June 2010). 3D cameras for TV broadcasting are similar in concept to those used in shooting movies. The only real difference is in the image resolution – movies are shown on larger screens and demand more pixels, even compared with Full HD (1920x1080 at 50/60Hz, known as 1080p).

However, for the State of Origin rugby league match on the May 26, one innovative camera made its appearance: a wireless, hand-held, broadcast quality 3D rig and there are only a handful in existence. It consists of a pair of "lipstick" cameras mounted side-by-side to simulate the interocular distance and gives viewers the impression that they are standing on the sidelines, either looking at the match itself or else at the players on the bench.

Nine NRL SOO1 On-Air Production Gallery, taken at the first State-Of-Origin match held in Sydney on May 26. Each of the monitors depicts the live individual camera output, with the Director "calling the shots" as required.

Because the experience of watching 3D sport is so different from what we are used to, the camera work is tailored to suit the experience. The 3ality team have trained the camera crews in new techniques optimised for 3D sport coverage.

Viewers watching the games in 3D will notice fewer cuts and zooms than we are used to on regular TV. There are also fewer close-ups. This is because with 3D TV, it is much easier to follow the action with a wider perspective. The players and the ball are very well defined on the screen and since our brains are already wired to decode depth information, following the action is intuitive.

As a result, wider, longer shots tend to be used which are better able to show the action within a larger context. In fact, watching sport on 3DTV is much more akin to being at the game than is a regular TV broadcast.

However, this isn't the only reason for changing the shooting technique. The other reason is that rapid cuts and zooms can be very jarring when viewed in 3D, especially if the convergence distance changes dramatically between shots.

Therefore, every 3D camera has an additional operator whose sole job is to control the convergence distance for that camera. This is managed by a new production position, a "stereographer", who is in charge of ensuring that cuts between cameras are only made at the point when their convergence is close enough to avoid a jarring transition.

Camera convergence can be adjusted mechanically but 3ality's system also involves digital processing for finer control. It is even possible to adjust convergence with digital processing only (eg, with a Sony MPE-200 Stereo Processor) but a combined approach is best.

3ality have developed rigs using two different mechanical systems. One solution is to mount the cameras side-by-side with one fixed and the other moving closer to or further from it (while automatically adjusting zoom and focus).

The other method involves beam-splitting using a piece of precision semi-mirrored glass similar to that used in telescopes. In this case the right camera is mounted horizontally and the left camera vertically. Beam-splitting rigs can simulate much smaller interocular distances (virtually down to zero) so they work much better in scenes with objects close to the camera.

3D encoding and transmission

Once the cameras have captured the action and the production team have chosen which shots to use for broadcast, the next step is to add overlay information such as the time and score. This too is accomplished digitally and depth information is added at the same time which makes the scoreboard appear to float in front of the sports field.

The next task is to encode the final left/right video streams into a format which can be transmitted over the air and received by home 3DTV sets.

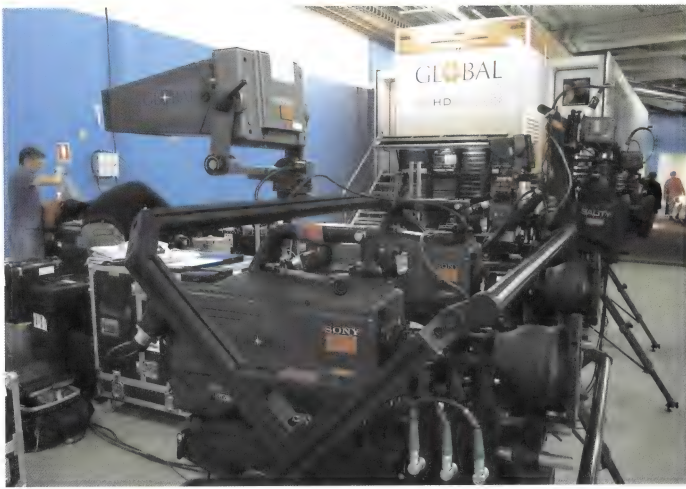

This photo shows both types of cameras from 3ality with the OB (Outside Broadcast) van in the background. The side-by-side rig is front while the horizontal/vertical beam-splitting rig is behind it.

There are a number of ways to do this but there is currently no standard approach. Most systems involve combining the left and right eye images into a single video stream which is transmitted similarly to regular HD programming. A 3DTV set extracts the left and right images and displays them separately to viewers' eyes to reconstruct the 3D image.

Channel Nine and SBS are using the side-by-side method which involves compressing the images horizontally so that they are each half the normal width (an "anamorphic" format, ie, not retaining the original aspect ratio) and then placing the left and right eye images on each side of the virtual screen. With this method, the decoded images have half the normal horizontal resolution (ie, 960 pixels rather than 1920) but this is not readily apparent when watching it.

This format gives the best results when using the industry standard 1920x1080i HD format.

Other similar schemes for combining the two video streams into one include above-and-below, line interleaving, checker-boarding and so on. However, the side-by-side approach means that viewing the 3D stream on a normal 2D set is not impossible – it looks very odd but it is possible to make out what is going on.

Ultimately, 3DTV signals may end up being transmitted as standard HD video for the left eye along with some invisible sideband data which contains the depth information. This system is known as 2D plus Delta or 2D plus Depth. The 3DTV set will then use this information to reconstruct the right eye image.

The advantage of this approach is to yield a single backward-compatible transmission suitable for display on a normal 2D HDTV set, as well as a 3D set, without needing a full additional broadcast channel.

As standards are still in development, 3D TV sets do not currently support this method. However all 3D sets now being sold (as far as we know) have a USB socket which is intended to allow new firmware to be uploaded to the TV. This means that if and when a sideband 3D system like this is standardised, manufacturers might release patches enabling their sets to decode this type of signal. As a result, you can buy a 3D set now without too much risk of it becoming obsolete as the broadcast methods change.

MPEG-4

Readers may recall that in "Digital TV – Where To From Here?" (March 2010), Alan Hughes argues that HDTV broadcasts should move towards MPEG-4 encoding.

Well, Channel Nine and SBS have made a significant step in this direction with their decision to exclusively use MPEG-4 for 3DTV broadcasts.

This decision was based on a number of visual quality tests between MPEG-2 and MPEG-4 encoded transmissions, with the conclusion being that 14 megabits/second MPEG-4

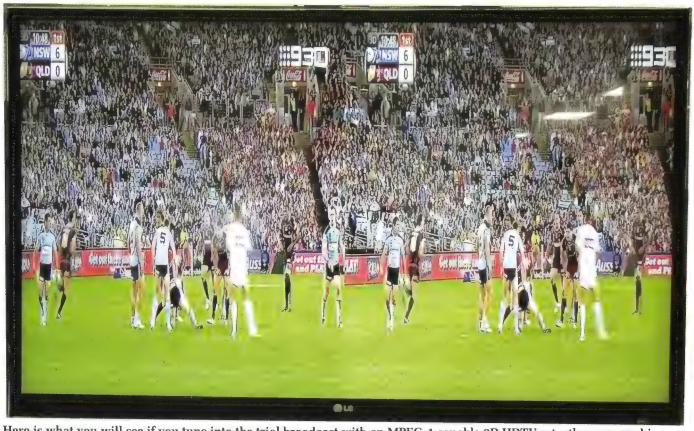

Here is what you will see if you tune into the trial broadcast with an MPEG-4 capable 2D HDTV set – the anamorphic left and right eye images side-by-side. Note how the perspective differs, for example, you can see different sections of the advertisment behind the players in each image. The white objects on the right side are not part of the broadcast – they are lights reflecting off the TV screen. (Photo Phillip Storey).

video is roughly equivalent in quality to 23 megabits/second MPEG-2. This lower data rate results in a smaller bandwidth usage for the 3DTV broadcasts, saving on multiplex space. This also means that while lower transmit power is being used for the 3D trial broadcasts, the coverage is still very extensive. The final standard chosen for Nine's 3DTV broadcasting experiment is side-by-side frames encoded as 1080i (1920x1080 pixels, 50 fields per second) with 14 megabit MPEG-4 video and 384kbps Dolby Digital AC3 audio.

The transmission modulation scheme uses 16-QAM instead of the regular 64-QAM. This configuration is likely to carry over to any future permanent 3D channel from Nine/SBS and probably other channels too, at least until the possible transition to 2D plus Delta encoding.

3D television sets

Assuming that you can pick up the experimental 3D signal on digital channel 40 (a re-scan may be required to find it) then all you need to watch it is a 3D television set. So how do these sets work?

There are actually multiple competing technologies but by far the most common approach with consumer sets involves each viewer wearing a set of active glasses. These can fit over regular glasses and a liquid crystal shutter is mounted in each eyepiece. The glasses are powered by an internal battery, recharged by being plugged into the television set.

The sets themselves are effectively just normal LCD or plasma screens but with very fast refresh rates – up to 200Hz (or 240Hz for 60Hz countries). They alternately display the left/right eye images at this rate. An infrared pulse is also transmitted from the set in sync with the image switching which is picked up by an IR receiver in the glasses.

Using this pulse for synchronisation, each eyepiece alternately becomes opaque, ie, the left eye is blanked off while the right eye sees the right image and then the right eye is blanked off while the left eye sees the left image. The apparent refresh rate is half the actual rate, ie, 100Hz for Australia.

How well does this work?

We would have to say the 3D effect is fairly convincing. For those wondering what happens if you watch the set without glasses, some objects on the screen appear normal while other objects are horizontally smeared due to the double image. You can watch it but it is sometimes hard to see exactly what is going on. There are no strange colours – just a double image.

This isn't really a problem though, since you can buy multiple sets of glasses to go with each television and they can all be used simultaneously. They are relatively comfortable to wear although we don't know how we would feel wearing them for several hours.

As for competing 3D television technology, people working on the production of 3DTV tend to use a different system where the left and right eye images are differently polarised. This means that the glasses used don't need to be synchronised to the screen – they are entirely passive.

One of seven 3D cameras used to capture the State of Origin match. A hood has been placed over the camera to protect it from the torrential rain on the night.

This has significant advantages when working with multiple monitors which are not synchronised, as they can be in a television production van or studio.

So what now?

In addition to the State of Origin and World Cup games, which are being broadcast live, during the day Channel Nine and SBS are broadcasting highlights of the games recorded so far. Many consumer electronics retailers will be able to receive these broadcasts and use them to demonstrate 3DTV sets.

So if you want to see what 3DTV is like and you live in or near an area which is serviced by one of the aforementioned towers broadcasting the 3D signals, head into your local retailer and ask to try out one of the sets.

Outside of retail hours, those games broadcast so far will be repeated on a loop so that anybody with a capable set can tune in. The number of games in the loop will likely expand as more are broadcast.

What if you don't have a 3D TV? Anyone with an MPEG4-compatible TV set or set-top box will be able to receive the 3D broadcast trial (on digital channel 40) provided they are in the reception area of the transmitters listed above. You will see the broadcast as two images side by side. (We wonder if you used an old-fashioned stereoscope, would you perceive it as 3D? Hmm).

Part of the 3D production desk at Channel Nine. The two monitors show 13 feeds, with the rackmount video processing gear arrayed below them.

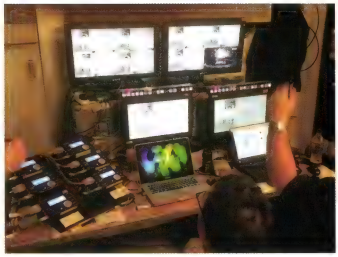

This photo taken in the OB van shows the 3ality handheld convergence controllers (lower left) along with yet more computers and monitors.

If you live in an area served by a UHF translator then you miss out. Sorry about that.

This experiment is scheduled to end on Monday 19th July 2010 when the temporary broadcast license expires. We hope that this experiment will convince enough people that 3D television is worthwhile so that it can lead to one or more permanent 3D channels.

Of course, 3D TVs can also show regular 2D programming. Broadcasters won't necessarily show 3D all the time but it seems likely that most sport matches might be shown in 3D in just a few years time and other programming may well go to 3D shortly after.

In fact, given how affordable the new 3D sets are (especially considering their size and the newness of the technology), it is likely that this will take off quickly. Certainly, anybody shopping for a new HD set will be tempted to spend some extra money to get 3D capability, with the expectation that more program material should be available in the near future.

And naturally since the 3D information is encoded in a regular video stream, DVDs and BluRay discs with 3D content are already coming onto the market. So even if you aren't (yet) in an area serviced by 3DTV broadcasts you can still get some benefits from one of the new 3D sets.

For more information on the Channel Nine/SBS 3DTV trial program visit http://channelnine.ninemsn.com.au/article.aspx?id=1045700 **and** http://hwtheworldgame.sbs.com.au/news/1001037/SBS-to-broadcast-World-Cup-in-3D SC

Acknowledgement:

We would like to thank Phillip Storey of Storey Communications and Geoff Sparke of Nine Network Australia for a tour of the 3D production facilities at Channel Nine and for providing us with the information and most of the photos (taken by Sean Frazer) in this article.

benchmark
JULY 2010

dick smith
Talk to the Techxperts
dicksmith.com.au

Alarm Phone Kit $99
Easy DIY installation with no wiring. The complete security solution while being a functioning telephone. Includes 2 x wireless PIR movement sensors, 1 x wireless door/window sensor, 2 x ON/OFF key chain remotes. Optional 24/7 back-to-base monitoring, or monitor it yourself. L6199 **LIMITED STOCK**

Dick Smith Bench Style Function Generator $139 SAVE $60
The FG-30 is a multi-purpose, highly reliable and low-cost 3MHz sweep function generator. It's easy to use, with features that make it an ideal instrument for electronics, education, production, and research and development laboratories. Features include 6 output waveforms, a pulse generator and a sweep generator. Supplied with adjustable tilt handle, mains lead, and a detailed Instruction Manual. Not carried in all stores, but can be ordered in. Q1826 **LIMITED STOCK.**

Dick Smith 30-Piece Mini Bit Set with Handle $12.88 SAVE $7
High quality 4mm mini-bits made from super-hard S2 grade steel alloy, includes extension shaft and quality handle with metal threaded tightening section. Covers a range of Flat blade, Philips head, Torx and Hex styles.
T6337

Dick Smith Flexible Cable Tidy Wrap Kit $15.88
This handy cable management sleeving kit is so simple to use as it easily zips down, pushing loose cables into the wrap with the supplied tool. To unwrap, simply peel and zip apart! 1.8m long, supplied with Zip Clip tool, 4 stick-on Wall Mount Clips and 14 equipment ID labels. L6270

CREST HDMI™ Cable v1.4 2 Metre $118
High definition audio and video in the one cable! Supports the new HDMI™ v1.4 standard for full 4K HDTV (4096 x 2160p) signal transmissions plus 3D home theatre and gaming. Includes HDMI™ Ethernet channel compatibility (100Mb/sec) as well as Audio Return Channel support. Finish may vary from image shown. CA0235

Dick Smith General Purpose AC/AC Transformer 12 - 30V @ 2 Amps $8.88 SAVE $4
Secondary output: 0-12-15-17.5-20-24-27.5 and 0-30 volts. Secondary current: 2 amps. Dimensions: 66(h) x 79(w) x 69(d)mm. Terminations: solder lugs. Not carried in all stores, but can be ordered in. M1991
LIMITED STOCK

Illuminated Pocket Magnifier $14.99 SAVE $5
Great for checking components, PCBs, and other items where a magnified view is required. Features a large 26mm coated glass lens, 10x magnification, carry pouch and a white LED to provide lighting of the viewed item. Requires 3 x AAA size batteries. Not carried in all stores, but can be ordered in. T4597

Dick Smith 2-way HDMI™ Switcher $49.88 SAVE $10
Expand the number of HDMI™ slots in your HD TV or monitor. Easily switch between two HDMI™ devices without the hassle of unplugging cords. Remote control included. LA4680

Dick Smith HDMI™ Switch Box $98
Connect up to 4 HDMI™ devices at once and switch between them using the supplied remote control. HDMI™ 1.3b compliant, supports HDCP, gold plated connectors, and also provides Auto Signal Detection. CA0513

$49.99
SAVE $30

Dick Smith 3.5 Digit LCR Multimeter
Measures inductance, capacitance, frequency, resistance, plus AC/DC current and voltage. Also tests transistors, continuity and diodes. Other handy features include a large 2000 count LCD screen, auto power off, low battery warning and an over-range indication. Comes complete with test leads and holster. Not carried in all stores, but can be ordered in. Q1559

$249 EACH
SAVE $50

Dick Smith 1-15V DC 60A Heavy Duty Lab Power Supply
High efficiency Lab supply with adjustable 1V to 15V DC output, huge 60A continuous current rating, plus low ripple output and internal cooling fan. Front and rear panel DC outputs, with a Remote sensing terminal to compensate for cable losses. Features large LED front-panel metering and heavy-duty rear panel banana sockets. Not carried in all stores, but can be ordered in. Q1775 **LIMITED STOCK**

$19.99

Autoranging Pocket Multimeter
Large LCD for easy viewing and is easily carried in your pocket, tool case or vehicle glovebox. DC and AC voltage measurements, plus Resistance, Frequency, Capacitance, Duty Cycle, Diode and Continuity checks. Supplied with fitted leads and battery plus detailed instructions and vinyl holder. Not carried in all stores, but can be ordered in. Q1473 **LIMITED STOCK**

$59
SAVE $40

Dick Smith Deluxe Dual Input Thermometer
Compact, dual input 4.5 digit digital thermometer, complete with 2 x K-type sensors. Offers both Celsius and Fahrenheit readings. Beeper sounds when preset temperature limit is exceeded. Also includes Relative mode, Min/Max readings, and Auto Power Off function. Not carried in all stores but can be ordered in. Q1437

$99
SAVE $48

Dick Smith 10MHz Single Channel Oscilloscope
An economical and easily transportable Oscilloscope with bandwidth of up to 10MHz and Vertical sensitivity up to 5mV/DIV. Easy to operate, it's an ideal instrument for a wide range of hobby and educational uses. Supplied with a 1:1 and 10:1 switchable CRO probe, tiltable carry handle and detailed instruction manual. Not carried in all stores but can be ordered in. Q1803 **LIMITED STORE STOCK ONLY. NO WEB OR MAIL ORDERS.**

$19.99
SAVE $3

Fujicell Multi Purpose Battery Charger
Charges AA and AAA NiMH batteries. Portable power for selected mobile phones, PDAs, MP3s, iPods and some digital cameras. Includes USB cable and selected connectors for Blackberry, Nokia and Motorola mobile phones. Ideal for travellers. S4081

SANYO $29.99

Eneloop Battery Charger with 4 x AA Ready-to-Use Batteries
High capacity, slow discharge 2000mAh AA size rechargeable batteries, complete with mains charger. S4415

$39.87

Dick Smith Universal Battery Charger
Mains powered, charges AA, AAA, C, D and 9V, NiCd or NiMH rechargeable batteries. S4099

Energizer $69.98

1 Hour Charger with 4 x AA NiMH Batteries
Recharge your AA or AAA rechargeable batteries in only one hour! Includes 4 x AA high capacity 2450mAh Energizer rechargeable NiMH batteries. S4408

Programming PICs: How It's Done

Many SILICON CHIP projects include a PIC microcontroller as the central component. But how do you program the PIC if you're not buying a kit or if you want to upgrade the firmware to a later version? Here's a step-by-step guide to doing it yourself.

By MAURO GRASSI

FOR MANY ELECTRONICS enthusiasts, programming the PIC micros that are now used in so many SILICON CHIP projects is something of a mystery. If you buy a kit, it usually doesn't matter because the micro will be supplied pre-programmed. Alternatively if you're building a project from scratch, then you've either got to pay someone to do it for you or learn how to do the job yourself.

A similar problem arises if the PIC fails and has to be replaced or if you want to update the firmware to a later version. It's not uncommon for the firmware to be revised after a project has been released, usually to add extra features but also sometimes to fix any bugs.

Fortunately, programming PICs is straightforward although you do require a low-cost PIC programmer (more on this shortly). By following the simple steps outlined in this article, you will be able to program almost any Microchip microcontroller, including the popular 16F, 18F, dsPIC33F, PIC24F and PIC32 families.

A few basics

PIC microcontrollers have onboard non-volatile memory (FLASH) that stores the program code (some also have onboard EEPROM for storing persistent data). This program code is referred to as the "firmware". The term "non-volatile" simple means that the firmware remains in memory even when the power is turned off.

Programming (or reprogramming) can be done in at least two ways: (1) through "ICSP" (In Circuit Serial Programming) or (2) through "RTSP" (Run Time Self Programming). The latter option requires a "bootloader" program to be running on the target device. A bootloader is a separate program that can write a new firmware image onto a microcontroller. The firmware image is supplied to the bootloader usually via a USB or serial connection, or from some other storage medium (eg, a memory card).

In most cases, however, a bootloader will not be used. It adds complexity to the code and the bootloader itself needs to be initially programmed. As a result, many micros are programmed using ICSP.

Some projects include the necessary ICSP interface as part of the design (ie, it's incorporated into the PC board). Otherwise, you will need to remove the PIC micro from its socket and program it externally.

Table 1: Programming & Power Supply Connections

Line	Function	Connect To PICKit3 Line
PGD or PGED	Programming Data Line	Pin 4 (PGD)
PGC or PGEC	Programming Clock Line	Pin 5 (PGC)
Bar-MCLR/V_{PP}	Programming Voltage	Pin 1 (bar-MCLR/V_{PP})
V_{DD}	Device Voltage	Pin 2 (V_{DD})
V_{SS}	Device GND	Pin 3 (GND)
AV_{DD}	Analog Device Voltage	Pin 2 (V_{DD})
AV_{SS}	Analog Device GND	Pin 3 (GND)

What's needed

Assuming you have your target device (ie, the PIC micro), you will need the following: a PIC programmer, a PC with suitable software and a breadboard if your programmer does not have a ZIF (Zero Insertion Force) socket.

The programmer we recommend to start with is the PICKit3, which is a low-cost USB programmer (and debugger) from Microchip. There are other more expensive programmers available and they usually have advanced features that the PICKit3 lacks, such as bulk programming and better debugging options.

That said, the PICKit3 is suitable for all hobby work and for prototyping and development. It's portable, inexpensive and can even provide power

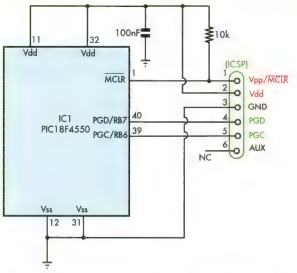

SC ©2010 **PROGRAMMING EXAMPLE**

Fig.1: this diagram shows a typical connection to a PIC18F4550. The pin-outs for different devices will vary and you should consult the relevant data sheet.

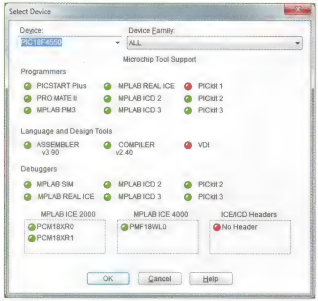

Fig.2: this window from MPLAB shows the which programmers support a selected device (here, a PIC18F-4550). A green dot indicates that the device is supported.

to your target board (through the USB).

The PICKit3 can program almost all Microchip microcontrollers and its firmware can be upgraded to enable support for future devices. The device itself is based on a Microchip microcontroller and it can update its own internal firmware using RTSP. This is an important feature because the programming algorithm for a future device may change (different Microchip microcontrollers have different programming requirements).

No ZIF socket

The PICKit3 does not have a ZIF socket. Instead, you connect its three programming lines plus two power supply lines to the target PIC. That's five lines in all and this is simple to breadboard up on a prototype board.

The programming lines are PGC, PGD and bar-MCLR/V_{PP}. PGC is the clock line, PGD is the data line and bar-MCLR/V_{PP} is the reset (Master Clear)/Programming voltage line. Note that these lines are common to all Microchip micros, so if you are using a different programmer, it also will have these lines.

Step-by-step programming

Let's now go through the programming procedure step-by-step. We'll assume that you're using a PICKit3 programmer and a breadboard.

Step 1 – Making The Breadboard Adaptor: as mentioned, the PICKit3 (or equivalent) does not have a ZIF socket, so a breadboard adaptor is used to connect to the target device. The PICKit3 has six lines (of which five are used) and these can be accessed using a single inline 6-way pin strip.

In our case, we made a custom PC board to accept this pin strip (see photos) but it can just as easily be made up on a small piece of Veroboard (0.1-inch grid). As shown in the photos, the 6-way pin strip is soldered to the top of the board.

Two additional pin header strips are then soldered to the underside of the board – one to make the connections between the PICKit3 programmer and the breadboard and the second to ensure that the assembly is stable when the PICKit3 is connected.

Step 2 – Making The Hardware Connections: install the PIC micro (henceforth referred to as the "target device") on the breadboard, then download its datasheet from the Microchip website.

We are assuming here that you have a DIP (dual in-line package) device. The datasheet contains the pinout information you will need to connect the programmer to the target device. Although there is variation in the pinouts across and within Microchip families, the lines listed in Table 1 (if present) must be connected.

Note that, depending on the device, these lines may be labelled differently. For example, some devices have multiple PGC/PGD pairs, which are then labelled with a numerical suffix (eg, PGED1, PGEC1).

If there is more than one pair, any pair can be used for programming. However, only one can be used for debugging (this is set by writing the configuration words of the microcontroller). We are not going to cover debugging using the PICKit3 here.

A typical programming connection diagram (ie, device to PICKit3) is shown in Fig.1. It uses a 10kΩ resistor

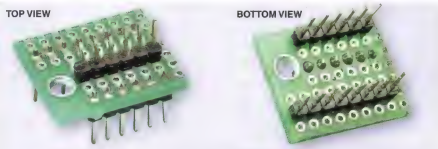

A 6-way pin header is required to connect the PICKit3 to the breadboard. You can make one up on a small scrap of Veroboard.

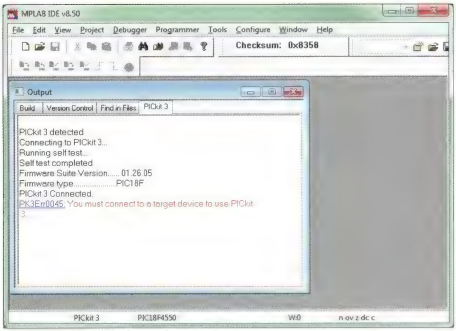

Fig.3: this "Output" window shows the PICKit3's startup sequence. The error given means that the PICKit3 did not recognise any device, in this case because power had not yet been applied.

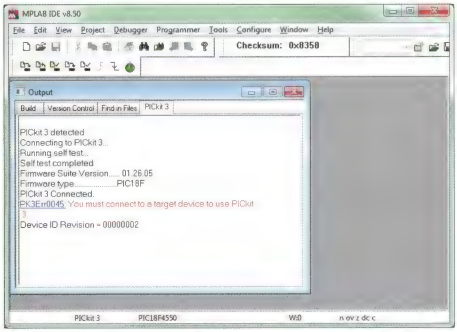

Fig.4: when power is applied to the target device via the PICKit3, it recognises the device and shows its ID revision number. This also indicates that communication between MPLAB and the target device (via the PICKit3) is good.

to pull up the bar-MCLR/V_{PP} line to the supply rail V_{DD} and some 100nF bypass capacitors on the supply lines. Avoid using capacitors on the V_{PP}, PGC and PGD lines, as these will affect the high-speed digital signalling on these lines.

In addition, the PGC and PGD lines have internal pull downs in the PICKit3, so don't use pull ups on these lines. As shown in Fig.1, they are connected directly to the PICKit3.

Note that the supply rail for different microcontrollers will be different. Usually devices with an "L" in the part number are low voltage (eg, 18LF1320).

The power for programming can be supplied by the PICKit3 itself but you have to enable the power output separately, as described later. For now, it's just a matter of connecting the relevant pins on the target device to the adaptor on the breadboard using wire jumpers.

The PICKit3 is available from Microchip Direct – **www.microchip.com/** The catalog number is PG164430) and the price is $US44.95 plus postage.

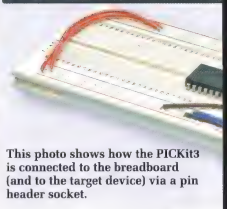

This photo shows how the PICKit3 is connected to the breadboard (and to the target device) via a pin header socket.

Note that the PICKit3 can supply up to 30mA at between 1.8V and 5V to the target device, which should be sufficient for programming (note: this may be insufficient for debugging if using the PICKit3 as the only power source). Note also that no separate system clock is required for programming – the clock signal supplied by the host (ie, the PICKit3) via the PGC line is sufficient.

Step 3 – Installing PC Software: suitable PC software is required to drive your programmer. Many programmers are supplied with their own software while the PICKit3 uses MPLAB. This IDE (Integrated Development Environment) is free and can be downloaded from the Microchip website at **www.microchip.com**

MPLAB is a 32-bit Windows application but will also run on 64-bit Windows versions. The screen grabs shown in this article are from MPLAB v8.50. Future versions may be different.

Step 4 – Connecting The PICKit3: the PICKit3 connects to your PC using a USB cable (supplied with the programmer). Assuming you have already installed MPLAB, the driver will be found and installed automatically as soon as the PICKit3 is connected.

Once that is done, you can connect the PICKit3 to your target device using your breadboard adaptor. Note that Pin 1 of the PICKit3 is indicated by a white arrow (see photo).

Step 5 – Programming: once the connec-

tions are complete, MPLAB is used for programming via the PICKit3 (it can also be used for development and debugging). You will need the new firmware program for the target device and this is usually supplied as an Intel HEX file (extension .hex). The programming steps are as follows:

- Start MPLAB, then go to Configure -> Select Device and select the correct device type. For example, if you are programming a PIC18F4550 microcontroller you need to select it here.

Whether or not PICKit3 can program your device will be indicated by either a green or yellow dot (see Fig.2). A green dot means that the target device is supported, while a yellow dot means beta (ie, not fully tested) support. A red dot means the device is not currently supported and you won't be able to use the PICKit3 to program that device.

- If the device is supported, enable the programmer by going to Programmer -> PICKit3. This will bring up a dialog box similar to Fig.3.
- Enable the PICKit3 to provide power for your device. To do this, go to Programmer -> Settings, click the Power tab and check that the correct voltage for your target device is indicated in the voltage group box. Usually MPLAB will set this to the default for the selected device. If there is a range of valid voltages, the lowest will be selected.

If the voltage is incorrect, change it to the correct value.

Now click the "Power Target Circuit from PICKit3" checkbox to enable the PICKit3 to power the device and click OK. If all is well, the PICKit3 will recognise the device, as shown in Fig.4. Here, the last line shows the Device ID (Silicon) revision, indicating that communication between your PC and the target device (via the PICKit3) is good.

- Go to File -> Import. An Open File Dialog will appear and select the "All Load Files" in the Files Type field. This includes the ".hex" file extension.
- Navigate to the new firmware file and open it. MPLAB will now decode the HEX file. You can see the contents of the memory by going to View -> Program Memory, as shown in Fig.5.
- Finally, go to Programmer -> Program to program the HEX file to your target device. MPLAB will erase the device, then program it and finally verify the image. If all goes well, you should see a dialog as shown in Fig.6.

Your device is now programmed and probably running. SC

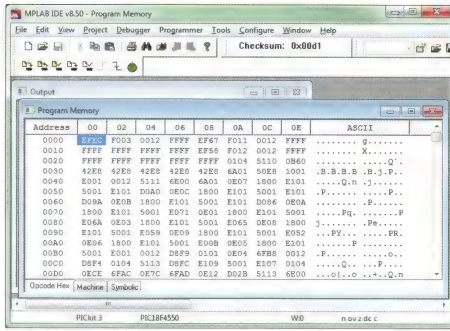

Fig.5: this screen grab from MPLAB shows the contents of the program memory. The HEX file is parsed and the program memory is then loaded with the firmware image.

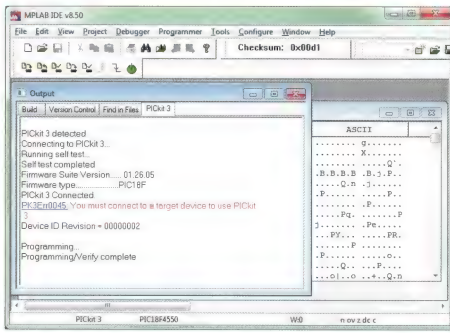

Fig.6: the "Output" window now shows the result of programming the device, in this case a PIC18F4550 device. MPLAB will program and verify the image. The "Programming/Verify complete" message indicates all is OK.

An Intelligent 12

Does your computer make more noise than it should? It's probably mostly fan noise! Slowing the fans down will reduce the noise but if you go too far, you could end up with fricassee of CPU!

In a typical personal computer most of the noise – and it can be significant – comes from the cooling fans. That's because they run at full tilt all the time, regardless of the temperature, inside the case or out.

You *may* need to run the fans at full speed when you are encoding home movies on a 40°C day but most of the time they just blow air around, creating a lot of noise.

This can be especially bad if you have a Media Centre PC in an otherwise quiet lounge room or home theatre. If you would like to hear the "sounds of silence" then this project could be just what you need.

Using just two ICs and a handful of components this intelligent fan controller will regulate the speed of up to eight 12V fans. It will measure up to four temperature points and use this data to smoothly control the speed of the fans, from completely off to fully on.

There are other ways to control the speed of fans but they tend to be rather crude. That is why we called this project an Intelligent Fan Controller.

One of the crude methods, unfortunately far too common, is to simply wire the fans to 5V rather than 12V. They will then run much quieter but more importantly, they will not be able to do their job on a hot day – and you risk incurring the damage that the fans were supposed to avoid.

Another simple method of control is to wire a variable resistor in series with the fans. You can buy some fancy looking controls that will mount on your computer's front panel; some even include a temperature display. But that

V Fan Controller

The High Points

- Control up to eight computer fans based on the measured temperature
- Windows software for configuration and display of temperatures and fan speeds
- Stand alone (does not need the Windows software or computer to run)
- Monitor up to four temperature points
- Works with most fans (2, 3 and 4 wire)
- Audible alarm on fan or sensor failure

By Geoff Graham

requires you to be constantly monitoring the temperature inside your computer and adjusting the resistor accordingly.

You may be fortunate enough to own a computer with a motherboard that has a fan controller but even they have limitations, mostly in the number of fans that they can control.

Not just computer fans

While computer fans are the obvious target, this Fan Controller is certainly not limited to computers. Because it can run independently (without being connected to a computer) it could control the fans in a greenhouse, home brewery or just about anything else that uses small (12V) fans.

Just bear in mind the current limitations mentioned later in this article.

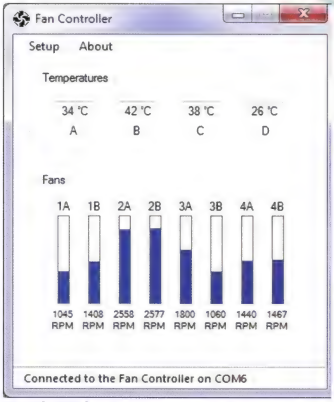

Fig.1: the Windows program running on your computer. This is optional but it will show you the measured temperatures (in °C or °F) and the speed of the fans in RPM. If a sensor or fan fails the entry will be coloured red and an audible alarm sounds.

The details

The Intelligent Fan Controller is built on an 100 x 80mm PC board, designed to fit in a spare 3½ or 5¼-inch drive

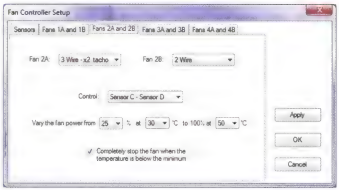

Fig.2: an example of the setup screen for a pair of fans. You can select the type of fan, what sensors are used to control the speed and the characteristics of that control. In this case the fan is controlled by the difference in two temperatures which would be the inlet and exhaust air temperatures.

Buck Converters Explained

A buck converter is an efficient way of converting a higher voltage to a lower voltage without throwing away the excess energy as heat. Most battery operated gadgets (mobile phones, iPods, etc) will use one or more buck converters in an effort to get the best use of the energy in the battery while supplying the various voltages required in the device.

A buck converter consists of a switch (always a semiconductor switch), a diode, inductor and capacitor as shown below. The load is represented by the resistor. At the start of a cycle (first phase) the switch is closed and current will flow through the inductor into the capacitor as shown by the red arrow in the drawing.

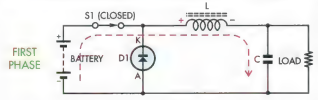

This current will be limited by the inductance of the inductor and the longer the switch is closed the higher the resultant energy stored in the capacitor. In the Fan Controller we hold the semiconductor switch closed for up to 170µS.

When the switch is opened (second phase, as shown below) the magnetic field in the inductor will collapse causing a spike of current which is conducted by the diode to further add to the charge in the capacitor. In the Fan Controller this phase lasts for up to 230µS.

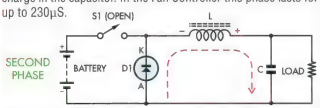

Finally there is an idle period before the cycle restarts. The overall effect is that the capacitor is topped up with "blips" of current while the load continuously draws current from it.

If you open and close the switch very rapidly (eg, >300kHz) you can get efficiencies up to 95% and a very smooth output voltage. In the Fan Controller we switch at 2.5kHz, which is easier to implement but results in a lot of ripple on the output. This does not matter as a fan will happily ignore quite high levels of ripple.

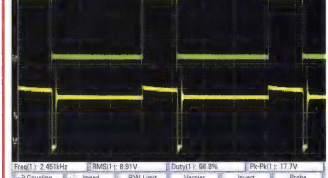

This 'scope grab shows the switch control voltage at the top and the switch voltage (at D1's cathode) at the bottom.

bay or any other handy spot inside your computer's case.

It has a USB 2.0 interface which works with software running on a Windows-based computer. Using this software you can monitor the various temperatures and the speed of the fans under control. It also provides an interface for configuring the controller for different types of fans.

Fig.1 shows the software in its monitoring mode, with the various measured temperatures (in °C or °F) and the speed of the fans in RPM (if they are fitted with a tachometer output). If a fan or a temperature sensor fails its entry will be highlighted in red and an alarm on the Fan Controller PC board will sound.

Fig.2 shows the software in its setup mode. As you can see, you can select the type of each fan, the temperature sensor used, the fan's minimum speed and the range of temperatures that will control the speed of the fan.

As well as selecting any one of the temperature sensors (numbered A to D), you can also select the difference between one of the first three sensors (A, B or C) and the last sensor (D). This allows you to control the fan speed based on the difference between the ambient (or incoming air) temperature and the exhaust temperature.

Incidentally, in most cases the Fan Controller will only need to monitor one or two temperatures. The provision for four inputs is intended for those with very complicated requirements. Similarly, most people will have far less than eight fans in their computer (although we've seen some with many more!).

The controller will accommodate most types of the fans found in computers these days. These include the standard 2 and 3-wire fans and the newer 4-wire fans that are controlled by a pulse width modulated (PWM) signal. The sidebar "Know Your Fans" describes all these fans in detail.

The design can independently control four pairs of fans or a total of eight fans. Each pair is independent and can be separately configured for different control characteristics.

Buck converter

The speed of 2 and 3-wire fans is controlled by varying their supply voltage using a circuit called a buck converter. To understand how this is done, refer to the circuit diagram as shown in Fig.3.

Taking the components associated with fans 4A and 4B as an example, the microcontroller generates a continuous string of pulses on its pin 7 (RA5) output. The frequency of the pulses is 2.5kHz and the microcontroller can control the output voltage of the buck converter by varying the width of each pulse from zero to 170µs.

The output from pin 7 is connected to two drivers within IC2, here wired in parallel. IC2 is an octal source driver, once used to drive the hammers in old style dot matrix printers (remember them?). This economical chip is suited to our task as it is designed to drive an inductive load and as an added bonus, includes a diode for our buck converter.

The source driver acts as a switch so that when its input is high (ie, above 2.4V) the output will be connected to 12V and when the input is low the output will be disconnected. We parallel two drivers to get the maximum possible drive current.

It is the combination of the source driver, its built-in diode, the inductor and the output capacitor that forms the buck converter.

Each output can supply 250mA which is ample as a typi-

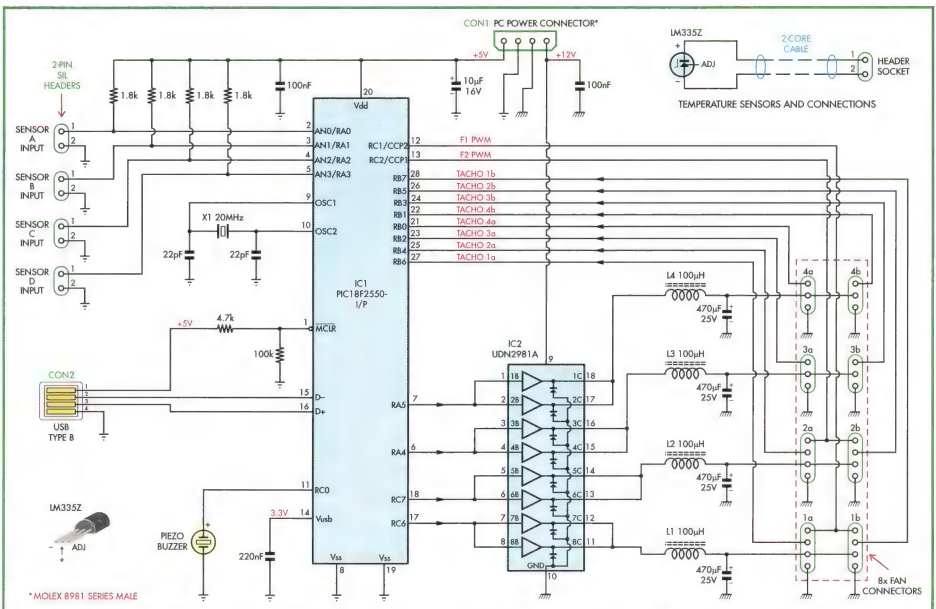

SC 2010

INTELLIGENT 12V FAN CONTROLLER

Fig.3: the circuit for the Intelligent Fan Controller is quite simple given its capabilities. Most of the work is done by the microcontroller (IC1) while IC2 and its associated components form buck converters. There are four variable voltage outputs, one for each pair of fans making a total of eight fans that can be controlled.

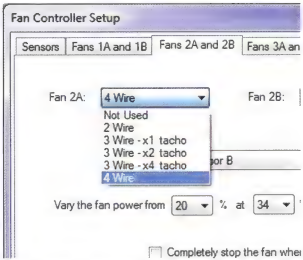

Fig.4: you can configure the controller for five different types of computer fan. The 3 wire fans differ in the number of pulses per revolution produced by the tachometer output so, for example, the "3-wire – x2 tacho" should be used with a fan that produces two pulses per revolution. If no fan is connected the entry should be set to "Not Used".

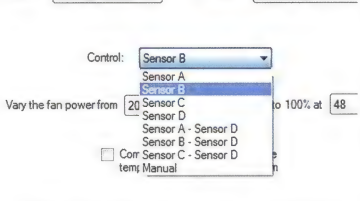

Fig.5: you can select the temperature sensor that will be used to control the speed of each pair of fans. You can also select the difference between a sensor and sensor D for responding to the difference between inlet and outlet temperatures. The "Manual" entry lets you select a fixed speed for testing.

cal fan will draw 120mA. However, if you are connecting two fans in parallel as a pair, you should check their total current draw - just to be on the safe side.

The main advantage of a buck converter is that it will deliver a stable DC voltage while generating little heat. Another method of voltage control would be to use a linear voltage regulator but that would generate a lot of heat forcing us to use heat sinks and a more complex circuit.

A completely different approach to speed control is to switch the power to the fan rapidly off and on, so that the overall average voltage is low but this has the side effect of rendering the tachometer output useless. This is because the tachometer signal is generated by electronics within the fan and the pulsed supply voltage messes up the output.

Not so with a buck converter; you get the benefits of low heat generation and a useable tachometer signal.

PWM controlled fans

The more modern 4-wire fans use a Pulse Width Modulation (PWM) signal to tell the fan what speed to run at. The frequency of this control signal must be 25 kHz and a 100% duty cycle tells the fan to run at full speed while a zero duty cycle will slow or stop the fan.

The Fan Controller will support four PWM controlled fans on the connectors labelled 1A, 1B, 2A and 2B. When the controller is set up for this type of fan it will hold the buck converter output voltage at the maximum and control the speed of the fan by varying the PWM signal from pins 12 and 13 of IC1.

The connectors for PWM controlled fans are backwards-compatible with the more common voltage controlled fans so you can always plug a 2 or 3-wire fan into these outputs.

Tachometer signal

The tachometer signal from each fan is connected back to the microcontroller, which uses it to measure the fan's rotational speed. As the fan rotates it will generate a square wave with the frequency proportional to rotation speed.

This signal is driven by an open collector output, which means that we need to provide a pull-up resistor so that the fan can pull the line low. This resistor is internal to the microcontroller and this feature saves us having to use a bunch of external resistors.

The speed of each fan is sent by the microcontroller to the Windows program via the USB interface and is also used to trigger an alarm if the fan stops. This alarm consists of a one second "beep" repeated every minute. The sound is generated by the piezo buzzer connected to pin 11 of the microcontroller.

Progressing around IC1 in a counter-clockwise direction, pins 2, 3, 4 and 5 of the microcontroller are analog inputs that are used to measure the outputs of the LM335Z temperature sensors. The LM335Z is an easy-to-use device that simply generates a voltage proportional to the temperature. An output of 2.73V represents 0°C and a change of 10mV is equivalent to a 1°C change.

If you verify the temperatures reported by the sensors you might find an error of up to a few degrees. This is a combination of inaccuracy in the LM335Z and variations in the computer's 5V supply, which is used as the reference for measuring the output voltage of the sensor. The error should be small and will be of little consequence in this type of application.

The microcontroller also checks the temperature sensors for a sensible reading and if any of them are shorted

What is Pulse Width Modulation (PWM)?

PWM simply means that the signal is a continuous string of pulses at a fixed frequency. By varying the ratio of the pulse width to the gap between the pulses we can vary the speed of a fan.

This ratio is called the Duty Cycle. When it is high (approaching 100%) the pulses will be wide and the fan will run at full speed. A low duty cycle (narrow pulses) will cause the fan to spin slowly.

or disconnected it will sound the alarm. As a safety measure it will also run any fans dependent on the faulty temperature sensor at full speed until the fault is corrected.

The firmware running in the microcontroller is designed to be stable but there may be a case where it has been set to an "impossible" configuration. To correct this you can reset the micro to its initial default condition by temporarily placing a wire link that shorts the connector pins for Sensor A together while you apply power to the circuit.

Continuing around IC1, the crystal connected to pins 9 and 10 provides the main clock to the microcontroller while the USB interface is connected to pins 1, 15 and 16. Pin 1 is used by the microcontroller to sense when the controller is plugged into a USB host so that it can commence communication.

The capacitor on pin 14 provides smoothing for the internal 3.3V supply used by the USB interface.

Power is supplied by a standard 4-pin Molex connector of the type used with ATA hard disks and CD/DVD drives. Most computers have plenty of these connectors so finding power should not be a problem.

The Fan Controller uses two completely separate ground systems, one for the 5V components (IC1 and USB) and the other for the 12V components (IC2 and the fans). These are connected to separate ground pins on the power connector and only meet somewhere inside the computer's power supply. This reduces the effects of current spikes in the buck converters which could interfere with the operation of the microcontroller.

The software application

With a device like this you always have the challenge of how to set the various operating parameters. We could have used a large number of DIP switches but as the controller will be mounted in a computer, we thought "why not give it a USB interface and modern software for the setup?"

The Fan Controller implements a serial interface over USB and it appears on your computer as a communications or COM port. This means that it is easy to send and receive commands to/from the controller (see the box "Communicating with the Fan Controller").

To get started you need to install the "Silicon Chip USB Serial Port Driver.

Know Your Fans

Most fans in today's computers are powered by a 12V brushless DC motor that typically draws 100mA to 130mA. Brushless simply means that the DC voltage is commutated electronically.

You can expect to see three different types of fans:

2-wire Fans

As the name suggests, this type of fan has just two wires. The connector type varies but normally it will be a 3 pin header plug with pin 1 being the ground, pin 2 the +12V supply and pin 3 vacant. By varying the supply voltage you can vary the speed of the fan.

3-wire Fans

These are the same as 2-wire fans with the addition of a tachometer output which is connected to pin 3 (vacant in a 2-wire fan).

Unfortunately there is little standardisation on the tachometer output. Most fans generate two pulses per revolution but some fans generate one or four pulse(s) per revolution. For this reason the setup program will let you configure three different types of 3-wire fans with one, two or four pulses per revolution.

If you do not know the specifications of your fan's tachometer you should select an entry that results in approximately 3000 RPM at full speed as this is the typical top speed of most computer fans.

4-wire Fans

The 4-wire standard was recently developed by Intel and is mostly used for the fans that Intel and AMD provide with their high performance CPUs. Other than this they are still quite rare.

The standard uses a 4-pin connector which is designed to be compatible with the 3-pin connectors used for 3-wire fans - so pins 1, 2 and 3 are the normal ground, power and tachometer output. Thankfully the tachometer output is standardised at two pulses per revolution.

Pin 4 is a Pulse Width Modulated (PWM) input that is used to control the speed of the fan. A 100% duty cycle (voltage mostly high) will make the fan run at full speed while a zero duty cycle (no pulses or zero volts) will stop the fan.

Despite this, most 4-wire fans will not let you completely stop the fan; the minimum they will run at is generally 20% of full speed.

The connector is a special type (see the illustration above) that allows it to be plugged into a 3-pin plug. In this case the fan will act as a standard 3-wire fan and can be controlled by varying the supply voltage.

A 4-wire fan works best when it is controlled by the PWM input so, if you have this type of fan, it should be plugged into the sockets for Fans 1A, 1B, 2A or 2B which fully support the Intel 4-wire fan specification.

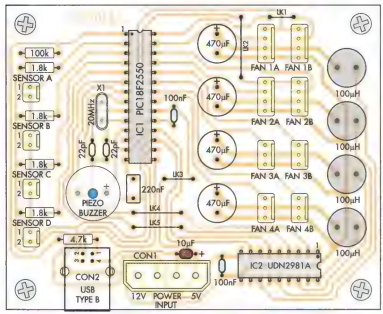

Fig.6 (top): the component layout with same-size photo of the completed PC board underneath. As explained in the text, you only need to include the output components for the number of fans you wish to control.

zip" available from the SILICON CHIP website. This driver was also used in the GPS Car Computer (January 2010) so, if you have already installed it for that project, you will not have to install it again. Regardless, full instructions are included with the device driver and it is not hard to install.

The Windows program can also be downloaded from the SILICON CHIP website and installed by running the Setup program. When you do this, you should be connected to the Internet as the installation package will also need to download some components of the .NET framework from the Microsoft website to complete the installation.

This program is written in Microsoft's VB Express 2008 which is a free development environment provided by Microsoft. The source code will also be available for download from the SILICON CHIP website so you can, if you wish, modify and recompile the program to suit your own needs at no cost.

The source code for the firmware running on the microcontroller is also available from the website and is also built using a free development environment, in this case Microchip's C18 Student Edition (or "Lite") compiler and the MPLAB development environment. So you can modify this too if you wish.

The device driver, the Windows program and both development environments will work with all modern versions of Windows (XP, Vista and Windows 7) in both 32 and 64-bit modes.

When you first run the Windows program you will be presented with a blank window and you need to set the COM port for the Fan Controller by selecting Setup -> Communications Port. To discover what port the controller is on you could try the listed COM ports at random (the software will tell you if it has found the Fan Controller) or you could use Device Manager to identity what COM port number was allocated to the Fan Controller.

Once the port number has been set the software will remember the number and automatically use that to establish communications the next time the program is started.

When communications have been established the program will display the temperatures and fan speeds measured by the Fan Controller. It will also download the current configuration settings from the controller and you can change these by selecting Setup -> Fans and Sensors...

Changing the settings

In the setup window you can select what temperature sensors are installed and the detailed configuration for each pair of fans. Fig.4 shows a drop-down list of the types of fans that can be connected. As you can see, the 3-wire fans come in three different types depending on the number of pulses per revolution produced by the tachometer.

Fig.5 shows the choices that you have for selecting the temperature sensor. These include any one of the four sensors or the difference between two sensors. Control of the fan's speed is made by adjusting the speed based on the temperature measured by the sensor. Fig.2 shows the detail of this setup section.

The minimum power for a fan is determined by the lowest speed that it can dependably run at. To determine this speed, select manual control and progressively increase the power setting until the fan starts spinning. Then add a 10% safety margin – eg, if the fan starts spinning at 25%, set the minimum to 35%.

In most cases you will want to leave the fan spinning at its minimum speed even when the temperature is cool, to ensure that there is always some circulation of air within the computer's case. However, by ticking the box under the temperature settings, you can instruct the controller to completely stop the fan when the temperature is low. A fan that is stationary is a very silent fan!

When the controller needs to start a fan that has been stopped it will run it for a few seconds at near full speed before it drops the power down to the minimum specified in the setup window. The same happens when power is first applied to the controller. This brief spin up ensures that a fan is not stuck in the stopped condition.

Any changes that you make to the setup are copied to the microcontroller in the Fan Controller, which saves them in its non-volatile memory. This means that you can disconnect the USB cable and even uninstall the Windows program and it will not affect the operation of the controller. This feature can also be used to set up the Fan Controller for another computer that does not have a USB port.

Construction

Construction of the Fan Controller is straightforward. All components sit on a single PC board measuring 80mm x 100mm and coded 18107101. The component overlay is shown in Fig.6.

The PIC18F2550 I/SP microcontroller needs to be programmed with the hex file (1810710A.hex) that will be available on the SILICON CHIP website. You should use IC sockets for both IC1 and IC2 as this will make it easier to do any fault-finding.

The inductors are high frequency chokes with a current rating of 1A or more. We used single ended "barrel style" chokes but the board will also accept the more common type of chokes wound on a toroid (or ring) core.

The 4-pin header connectors need a little explanation. The Intel standard for 4-wire fans specifies that the connector should have a narrow tongue which is the width of 3 pins (see Fig.7). This will allow you to plug in either a 3-wire fan using a 3 pin plug or a 4-wire fan using a 4 pin plug.

4-wire connectors for a PC board are harder to find than the proverbial "hen's teeth" so you will have to make your own from a normal 4 pin PC board connector by using a sharp knife to cut away 3mm of the plastic tongue behind pin 4. Fig. 7 shows what the connectors should look like.

On our prototype we only populated the first line of fan connectors (1A, 2A, etc) as we were unlikely to have more than four fans in our computers. You can also vary the components used. For example, if you were only going to use three fans you could omit the components (inductor, capacitor, etc) associated with fans 4A and 4B.

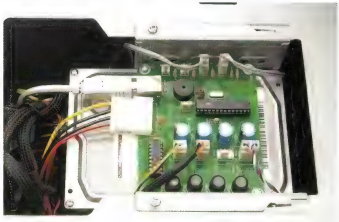

We mounted the Intelligent Fan Controller in a spare 3½-inch drive bay but there are many other places that you can mount it. You may need to fabricate a mounting bracket or use screws and spacers to keep it secure.

Parts List – Intelligent 12V Fan Controller

1 PC board, code 18107101, 100mm x 80mm
1 20MHz crystal
4 100µH HF choke (1A or higher rating) (Jaycar LF-1272 or Altronics L6222)
1 mini buzzer, PCB mounting (Jaycar AB-3459 or Altronics S6105)
1 4-pin disk drive power socket (Jaycar PP-0744 or Altronics P5671A)
1 USB type-B socket, PCB mount (Jaycar PS-0920 or Altronics P1304)
1 28-pin IC socket (0.3" pitch)
1 18-pin IC socket
4 2-pin header plug
4 2-pin header connector, PCB mount
4 3-pin header connector, PCB mount
4 4-pin header connector, PCB mount
Figure 8 (two core) flexible wire
100mm 0.7mm tinned copper wire (for links)

Semiconductors

1 PIC18F2550-I/SP microcontroller (IC1) programmed with 1810710A.hex
1 UDN2981A octal source driver (IC2)
4 LM335Z temperature sensor
All are available from www.futurlec.com or www.farnell.com.au

Capacitors

4 470µF 25V electrolytic
1 10µF 16V tantalum
1 220nF MKT
2 100nF monolithic
2 22pF ceramic

Resistors (0.25W 5%)

1 100kΩ 1 4.7kΩ 4 1.8kΩ

Similarly, if you only need two temperature sensors you can make up just two sensor cable assemblies and leave out the connector and resistor associated with Sensors C and D.

Each temperature sensor consists of an LM335Z sensor on one end of a length of lightweight figure-8 (two core) cable and a 2-pin header plug on the other end. You need to cut off the temperature compensation pin on the LM335Z as that is not needed and solder the wires to the remaining pins. Polarity is important so follow the diagram in Fig. 9. Before you solder the joints, slide heatshrink tubing onto the wires and shrink it over the joints after you have completed the soldering. This will insulate the joints and provide a neat finish.

Installation

We installed the Fan Controller in a vacant 3½" drive bay but it could be situated almost anywhere inside your computer. Depending on the chosen location you will probably need to make up a mounting bracket or use screws and spacers to hold the PC board securely.

Ideally the temperature sensor should be placed near the area that the associated fan will be ventilating. For

Communicating with the Fan Controller

The details for sending commands and receiving data from the Fan Controller are included in the source code which can be downloaded from the SILICON CHIP website. The following is a summary to give you the flavour of how it works.

The Fan Controller implements a serial interface over USB and every second it sends on this interface a string which looks like: FCD,42,45,40,38,40,40,40,40... etc.

The letters FCD form an identifying signature which is followed by 16 comma separated numbers. The first four are the measured temperatures (in °C), the next four are the output from the buck converters (in the range of 0 to 100) and the last eight are the speed of each fan in RPM.

You can set the various parameters of the Fan Controller by sending a command that starts with FCS followed by a sequence of comma separated numbers which are the new settings.

You can also query the controller for its current settings with the command FCQ and you will receive back a string that starts with FCR followed by the current settings.

All these commands are simple strings of ASCII characters. So, it you don't like the software that we have written, you can easily write your own program or use batch/shell scripts to interact with the Fan Controller.

example, if you have a fan mounted in the top of the case, the associated temperature sensor should also be in the top part of the case. If you want to keep it simple you can also control a number of fans with a single sensor mounted somewhere centrally in the case.

The Fan Controller is designed mainly for controlling general case fans but it can also be used to control the fans on your graphics card, power supply and/or CPU.

In the case of a graphics card or CPU each should have a dedicated temperature sensor that is clamped directly to the heatsink with some thermally conductive paste between the sensor and heatsink. This is because the temperature in a graphics card or CPU can rise rapidly depending on the processing load and a good thermal connection for the sensor will ensure that the Fan Controller can respond quickly. You should also set the minimum speed of the fan to be reasonably fast (say 35%) so that there will always be some air passing over the heatsink.

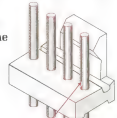

Fig.7 (right): the four-pin connector for fans 1A, 1B, 2A and 2B need 3mm of the locating tongue behind pin 4 to be trimmed, as shown in this diagram (and below). This will allow either a 4-wire or a 3-wire fan to be plugged onto the connector.

Fig.8 (left): this shows our home-made 4-wire connector (labelled FAN 2A) and a standard 3 wire connector (labelled FAN 3A). When you trim the plastic tongue on the 4-wire connector you need to make sure that a 3 pin plug can be fitted onto pins 1, 2 and 3 of the connector while leaving pin 4 free.

Fig.9: wiring diagram for the temperature sensor, cable and connector. The left-hand pin of the LM335Z is the temperature compensation pin and should be trimmed off. Note that the flat side of the sensor is uppermost in this diagram. Slide heatshrink tubing over the wires and shrink over the soldered joints on the sensor.

If the fan you wish to control is inside the computer power supply, it must be approached with caution. Many of the components in these devices sit at the full 230V mains potential and, if you are not careful, you could run the risk of electrocution or fire. Never open the computer power supply case without disconnecting the mains plug (usually an IEC connector); in fact, we caution against opening up the power supply unless you know what you are doing and have had prior experience with this type of device.

The safety-first adage "if in doubt, don't" is never more applicable than inside computer power supplies.

To control the speed of a fan in a power supply the best approach is to run the fan leads directly out of the power supply through a convenient hole in its cover. The leads should be firmly secured away from the other circuitry in the power supply so that they will not move around after you replace the cover.

The power supply should also have its own dedicated temperature sensor and, for safety reasons, this should be mounted outside of the case in the exhaust airflow from the power supply. The fan should be configured to keep slowly spinning, even at cold temperatures, so that the sensor can detect a temperature rise in the air exiting the power supply.

Fault finding

The firmware of the Fan Controller has a default setup which assumes four 2-wire fans (1A, 2A, 3A and 4A) controlled by Sensor A. So, as a first test, you can simply connect the controller to +5V and after 5 seconds you should hear a beep from the piezo buzzer indicating that it has detected a faulty sensor (because Sensor A is not plugged in). This tells you that the microcontroller (IC1) and its firmware are running OK.

As a more extensive test you should connect the controller via USB to your computer, load the driver and Windows program, and experiment with changing the settings of the controller. If you cannot get this working you should check the driver installation as this is the most likely failure point.

If the Fan Controller does not respond to either of these tests you should check that there is 5V between pins 19 and 20 of IC1. Also check for 12V between pins 9 and 10 of IC2. If you have an oscilloscope check for a 20MHz signal on pins 9 and 10 of IC2. This is the main clock for the micro and if it is not there nothing will work.

If the microcontroller is working and you have trouble with driving a fan you should check the buck converter circuit. There should be a string of pulses from the micro and also at the output of IC2 and finally, a voltage on the associated capacitor.

So that's it. Now all you need to do is build your own Intelligent Fan Controller and you too can sit back and enjoy the "sound of silence" from your computer! For errata, notes and new firmware related to the Intelligent Fan Controller go to http://geoffg.net/fancontroller.html. SC

SILICON CHIP

siliconchip.com.au

YOUR DETAILS

6 MONTH SUBS AND AUTO RENEWAL NOW AVAILABLE

Order Form/Tax Invoice

Silicon Chip Publications Pty Ltd
ABN 49 003 205 490
PO BOX 139, COLLAROY NSW 2097
email: silicon@siliconchip.com.au
Phone (02) 9939 3295 Fax (02) 9939 2648

This form may be photocopied without infringing copyright.

Your Name_____ (PLEASE PRINT)

Address_____

Postcode_____ **Daytime Phone No. (** **)**_____ **Email address** _____

Method of Payment: ❑ EFT (ring or email for details) ❑ Cheque/Money Order ❑ PayPal ❑ Visa Card ❑ Master Card

Card No. ❑❑❑❑ ❑❑❑❑ ❑❑❑❑ ❑❑❑❑ Card expiry date: ❑❑/❑❑

Signature_____

YOUR ORDER (SILICON CHIP PRINTED EDITION SUBSCRIBERS# QUALIFY FOR 10% DISCOUNT (except on subscriptions!)
SIMPLY TICK THE ITEMS REQUIRED – DON'T FORGET TO FILL IN DETAILS ABOVE. WE'LL WORK THE TOTAL OUT FOR YOU AND SEND YOU A RECEIPT WITH YOUR ORDER

SILICON CHIP SUBSCRIPTIONS (all prices include P&P)

- ❑ AUSTRALIA 6 MONTHS (INC. GST) **(NEW!)** $49.50
- ❑ AUSTRALIA 12 MONTHS (INC. GST) $94.50
- ❑ AUSTRALIA 12 MONTHS WITH BINDER (INC. GST) $111.00
- ❑ AUSTRALIA 24 MONTHS (INC. GST) $182.00
- ❑ AUSTRALIA 24 MONTHS WITH 2 BINDERS (INC. GST) $215.00
- ❑ NEW ZEALAND 6 MONTHS (AIR MAIL) **(NEW!)** $AU55.00
- ❑ NEW ZEALAND 12 MONTHS (AIR MAIL) $AU99.00
- ❑ NEW ZEALAND 24 MONTHS (AIR MAIL) $AU196.00
- ❑ OVERSEAS (EXCEPT NZ) 6 MONTHS (AIR MAIL) **(NEW!)** $AU75.00
- ❑ OVERSEAS (EXCEPT NZ) 12 MONTHS (AIR MAIL) $AU135.00
- ❑ OVERSEAS (EXCEPT NZ) 24 MONTHS (AIR MAIL) $AU260.00

NEW! CONVENIENT AUTOMATIC SUBSCRIPTION RENEWAL:

❑ Tick here if you'd like us to *automatically* renew your subscription when it elapses (ie, 6 month, 12 month or 24 month). We'll renew until you tell us to stop!

BACK ISSUES/ARTICLE PHOTOCOPIES

❑ **SILICON CHIP BACK ISSUES*: SC/EA/ETI PHOTOCOPIES**
– includes P&P – $12.00 within Australia; $15.00 overseas

*where in stock - photocopy of article supplied where issue is out of stock. EA/ETI: no back issues left, only photocopies available. Price is for each back issue or each article photocopy.

Nominate issue and article required: Month:..... Year:.....

Article required:.....

Please attach list if more than one back issue or photocopy required. There is a 10% discount for ten or more back issues and/or photocopies (no further discount applies).

SILICON CHIP MAGAZINE BINDERS

❑ **Embossed "SILICON CHIP", securely holds 12 months+ of issues**
Available in Australia only $14.95
(P&P is $10.00 per order; buy five or more in one order for FREE P&P)

P&P RATES:
Subscriptions, back issues and project reprints: P&P included
Binders (*available Australia only*)**:** $10.00 per order; for 5 or more P&P is free.
Books: Aust. $10 per order; NZ: $AU12 per book; Elsewhere $AU18 per book

SILICON CHIP BOOKSHOP (P&P additional – See below)

- ❑ AC MACHINES $66.00
- ❑ AMATEUR SCIENTIST CD ***NEW! Version 4.0*** $62.00
- ❑ AUDIO POWER AMPLIFIER DESIGN – SELF (NEW 5th EDITION) **$130.00**
- ❑ BUILD YOUR OWN ELECTRIC MOTORCYCLE (NEW) **$47.95**
- ❑ DVD PLAYERS AND DRIVES $95.00
- ❑ ELECTRIC MOTORS AND DRIVES $60.00
- ❑ ELECTRONIC PROJECTS FOR CARS (2003) – ***last few, shop-soiled – now...*** **$2.95**
- ❑ HANDS-ON ZIGBEE $96.50
- ❑ NEWNES GUIDE TO TELEVISION AND VIDEO TECHNOLOGY $70.00
- ❑ OP AMPS FOR EVERYONE $120.00
- ❑ PERFORMANCE ELECTRONICS FOR CARS $19.80
- ❑ PIC IN PRACTICE $65.00
- ❑ PIC MICROCONTROLLERS - KNOW IT ALL $90.00
- ❑ PIC MICROCONTROLLER - PERSONAL INTRO COURSE $60.00
- ❑ PRACTICAL GUIDE TO SATELLITE TV (7th edition) $49.00
- ❑ PRACTICAL RF HANDBOOK $90.00
- ❑ PRACT. VARIABLE SPEED DRIVES/POWER ELECT. $105.00
- ❑ PROGRAMMING 16-BIT MICROCONTROLLERS IN C $90.00
- ❑ RADIO, TV AND HOBBIES ON DVD-ROM $62.00
- ❑ RF CIRCUIT DESIGN $75.00
- ❑ SELF ON AUDIO (2nd edition) $90.00
- ❑ SOLAR SUCCESS - GETTING IT RIGHT EVERY TIME $47.50
- ❑ SOLAR THAT REALLY WORKS $42.50
- ❑ SWITCHING POWER SUPPLIES A-Z (inc CD-ROM) $115.00
- ❑ TV ACROSS AUSTRALIA $49.95
- ❑ USING UBUNTU LINUX $27.00

#10% discount offer does not apply to online edition subscribers nor to website orders

To Place Your Order:

eMAIL (24/7) *silicon@siliconchip.com.au* with order & credit card details

OR

FAX (24/7) This form (or a photocopy) to (02) 9939 2648 with all details

OR

PAYPAL (24/7) Use PayPal to pay *silicon@siliconchip.com.au*

OR

PHONE - (9-5, Mon-Fri) Call (02) 9939 3295 with your credit card details

OR

MAIL This form to PO Box 139, Collaroy NSW 2097

*ALL ITEMS SUBJECT TO AVAILABILITY. PRICES VALID FOR MONTH OF MAGAZINE ISSUE ONLY. ALL PRICES INCLUDE GST

07/10

CIRCUIT NOTEBOOK

Interesting circuit ideas which we have checked but not built and tested. Contributions from readers are welcome and will be paid for at standard rates.

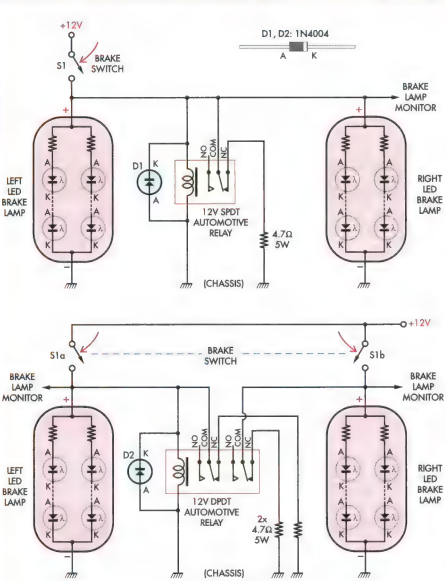

Roy Flynn is this month's winner of a Peak Atlas Test Instrument

Using 12V LED replacement lamps in cars

Replacing a car's brake lights and CHMSL (centre high-mount stop lamp) modules with 12V LED replacement lamps is a popular upgrade which improves brake light visibility and response time. However, it can cause serious problems with cruise control circuitry or lamp failure circuits which sense the low resistance of the cold lamp filaments.

We have even heard of a case where LED replacements caused problems with fuel switch-over in a car with an LPG tank.

Even if your car does not have lamp failure monitors, LED replacements are likely to cause problems with cruise control operation. Cruise control is normally deactivated when the brakes are applied and this can be sensed by sourcing a small current into the stoplight filaments.

With incandescent lamps fitted, the cold resistance of the filaments holds the respective cruise control input low and it goes high (to +12V) when the brakes are applied. However, when LED replacements are fitted, their forward voltage will typically be 3V or more, even at low sense currents of a few milliamps or less. Hence, the cruise control input is not pulled sufficiently low and so operation is inhibited.

This solution to the problem involves using a relay to provide a low resistance (4.7Ω) path for filament sensing when the brakes are off. When the brakes are on, the relay switches the resistor out of circuit. The resistor is rated at 5W so that it can handle the initial 3A current surge that momentarily occurs each time the brakes are applied, before the relay contacts open. Overall resistor dissipation is very low.

Two versions of the circuit are provided. One suits CHMSL replacements where the lamp is separately sensed from the main stop lamps. The second version shows how to connect a DPDT relay when the lamp filaments are sensed separately. In this case, both lamps circuits are isolated with separate relay contacts.

Note that a 12V automotive relay should be used to ensure long term reliability. The 5W resistor should be housed in a small sealed diecast box. This is specified in case the relay coil wiring goes open circuit or if the relay fails; the resistor will burn out within the confined space of the box without the risk of starting a fire. Grommets should be fitted to protect the wire entry to the diecast box.

Roy Flynn,
Ocean View, Qld.

Editor's note: while using a relay may seem like a crude approach it has the advantage of simplicity and also prevents the LED replacement lamps from glowing faintly when they should be off.

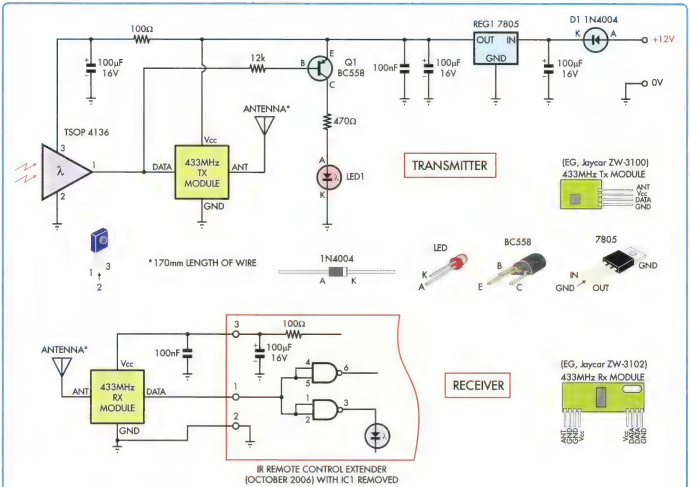

UHF link for remote control extender

The Infrared Remote Control Extender in the October 2006 issue of SILICON CHIP was a very popular project. It overcame the problems of previous designs in that it was compatible with Foxtel IQ set-top boxes.

However, if the remote control is being used, say, in a bedroom while the Foxtel set-top box is in the living room, this means that a wired connection must be run from the bedroom to the living room. If another TV in the rumpus room also needs a remote extender, then another set of leads must also be run to this location.

A much better approach is to modify the October 2006 project so that it becomes a wireless link between the remote control and the set-top box.

You will need a pair of UHF 433MHz transmitter and receiver modules, eg, Jaycar ZW-3100 and ZW-3102. The infrared decoder chip (IC1) needs to be removed from the PC board and the UHF receiver module installed in its place. The 5V supply for the infrared decoder now runs the UHF receiver module.

The separate transmitter circuit uses the TSOP4136 IR receiver/decoder chip which was removed from the circuit board to drive the UHF transmitter module directly and is also used to drive the BC558 transistor to provide a signal acknowledge function. The 5V supply rail is derived by a 7805 3-terminal regulator from a 9-12V DC plugpack.

In use, the wireless remote extender easily operates a Foxtel IQ box from a downstairs location to an upstairs location 12 metres distant through several walls and a timber floor.

Jack Holliday,
Nathan, Qld. ($40)

Issues Getting Dog-Eared?

Keep your copies of SILICON CHIP safe with these handy binders

Available Aust. only. Price: $A14.95 plus $10.00 p&p per order (includes GST). Just fill in and mail the handy order form in this issue; or fax (02) 9939 2648; or call (02) 9939 3295 and quote your credit card number.

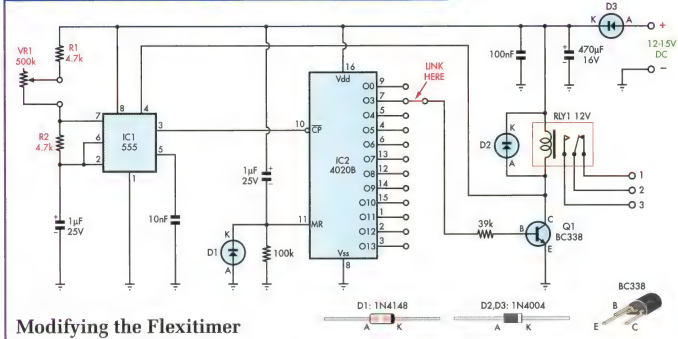

Modifying the Flexitimer for short intervals

The Flexitimer published in the March 1991 issue of "Electronics Australia" continues to be a popular project.

As originally published, it can provide time intervals from a few seconds up to 24 hours. These simple modifications give it variable time interval from zero up to five seconds. In essence, they involve reducing resistor R2 between pins 6 & 7 of IC1 from 470kΩ to 4.7kΩ and changing trimpot VR1 from 100kΩ to a 500kΩ potentiometer which is mounted off the PC board and fitted with a knob for convenient operation.

Finally, the original 270kΩ resistor (R1) in series with VR1 is reduced from 270kΩ to 4.7kΩ.

To replace the trimpot (VR1), solder wires to the two outer holes where VR1 would normally go, ignoring the centre hole, then attach those wires to the 500kΩ potentiometer. One wire goes to its centre tab (it doesn't matter which) while the other goes to the lefthand tab, when viewed with the pot's shaft pointing towards you.

Install the shorting link (marked in red on the circuit) in position O3.

When the potentiometer knob is turned fully anti-clockwise, the timer will run for around 0.15 seconds and when it is fully clockwise, it will run for around 5.7 seconds (depending on component tolerances).

SILICON CHIP.

Contribute And Choose Your Prize

As you can see, we pay good money for each of the "Circuit Notebook" items published in SILICON CHIP. But now there are four more reasons to send in your circuit idea. Each month, the best contribution published will entitle the author to choose the prize: an LCR40 LCR meter, a DCA55 Semiconductor Component Analyser, an ESR60 Equivalent Series Resistance Analyser or an SCR100 Thyristor & Triac Analyser, with the compliments of Peak Electronic Design Ltd **www.peakelec.co.uk**

So now you have even more reasons to send that brilliant circuit in. Send it to SILICON CHIP and you could be a winner.

You can either email your idea to silicon@siliconchip.com.au or post it to PO Box 139, Collaroy, NSW 2097.

Sound-triggered camera

This circuit was devised to cause a camera to be triggered by the sound of a rifle, to get pictures of a bullet striking an object such as a bottle or balloon. It was designed around a Canon 350D camera which requires 2-position triggering, even on its manual settings. Hence, it must first be set in focus mode and then triggered.

The camera also has a mechanism that locks the mirror out of the way to reduce reaction time and reduce vibration. There is a 2.5mm stereo jack in the camera for remote triggering, for use on camera tripods for still shots.

To summarise, the circuit must set the camera to focus, then hear the rifle shot, pause for the appropriate time for the bullet to reach the bottle and then trigger to take the picture. After that, the camera needs to be reset.

The circuit consists of an electret microphone and op amp IC1 which is connected as an inverting amplifier. Its audio signal is fed to a PICAXE-08M micro which also drives two relays to control the camera. The program for the PICAXE requires the use of interrupts due to the short period of the rifle shot.

The calculations for the delay (pause 100) are based around the use of a .22-calibre rimfire rifle, which has a projectile speed of around 390m/s, which is just over the speed of sound (344m/s). If the camera is placed 6m from the target, the time the projectile takes from when it passes the camera to when it reaches the bottle is about 15ms.

The reaction time or pull-in time of the reed relays, which are the slowest part of the circuit, is about 4ms while the reaction time of the Canon 350D camera is about 100ms. So there is a 104ms delay between the sound of the rifle shot reaching the electret microphone and the photograph being taken.

Subtracting the 15ms that the bullet takes to reach the bottle, there is 89ms from the time the projectile strikes the bottle until the photograph is taken. This calculation ignores the delay in the program itself and in the PICAXE.

If the triggering is too early, it is a simple matter to change the "pause 100" to a larger value.

Timothy Crute,
Mount Helena, WA. ($40)

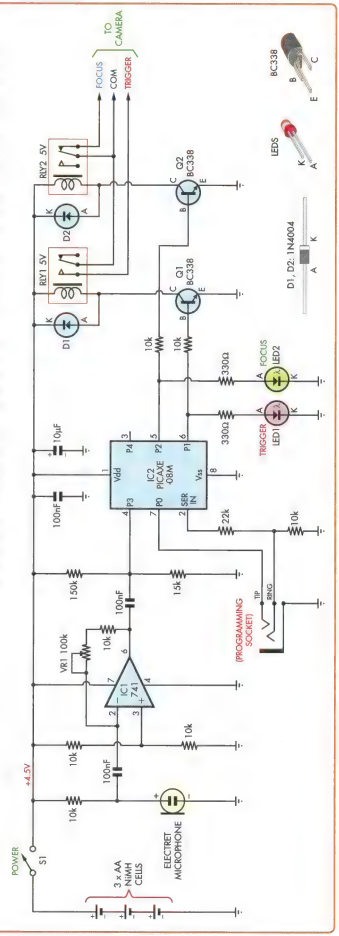

Picaxe Program Listing

```
setint %00001000,%00001000          'sets pin number 3 so if it goes high
'because of sound of gun, program jumps from main to 'interrupt

main:
      low 1                         'makes sure pin 1 is low-note relay normally off
      low 2                         'pin 2 low-camera focus-note relay normally on
      goto main                     'loops back to main unless interrupted

interrupt:
      pause 100                     'delay to be determined by trial and error
      high 1                        'camera triggered
      pause 1000                    'waits one second
      low 1                         'like taking finger off camera button
      high 2                        'like taking finger off camera button
      pause 1000                    'waits one second
      setint %00001000,%00001000    'resets interrupt
      return                        'returns to main as before interrupt
```

SERVICEMAN'S LOG

Procrastination is the thief of time

Will I or won't I? Should I fix it or not? Should I keep it or send it to e-waste? Procrastination is the thief of time but I think I've finally made my mind up that I'm probably not going to be hurried into making my mind up – well, maybe.

I am at present swamped with uncompleted projects that are taking up what little space I have left and leaving me on edge mentally. The cat senses this and gives me a wide berth. Mrs Serviceman, on the other hand, just blames me for procrastination. Actually, she blames me for everything – it saves time arguing.

It's not really fair, because if you look at each project there's always a good reason why it's stalled. Mrs Serviceman always reckons it is just my backside that needs a good kick to get things moving and that is what normally happens!

Making money in this business can be tricky. For example, a plasma set comes in with "is it worth it?" plastered all over it and "please quote". Of course, the customer wants this done for free but you don't need me to tell you that free quotes are about as useless as free guesses. The only way to give an accurate estimate is to, well, fix it – albeit temporarily.

These days, with some plasmas, it can take an hour just to remove the covers and boards. As a result, I no longer give free quotes.

So there we have our 127cm (50-inch) plasma taking up about three square metres of our two square metre bench space and all the voltages read OK. None of the boards looks or measures faulty, there are no circuit diagrams and they cannot be fixed at component level.

Each board costs a small fortune, so God help me if I choose the wrong board or boards, as the suppliers charge large restocking fees. In the meantime, the client is pressing for an answer.

Finally, you make your diagnosis, cost it and give it to the client, who can't believe it is so expensive (that usually makes two of us)! The repair bill for their $5000 5-year old plasma is often nearly as much or more than the cost of a brand new set but there's nothing I can do about that. There are so many brands and models out there that the chance of obtaining a good secondhand replacement board at modest cost is quite low.

And even if you could, how do you guarantee it?

Often too, a new replacement will have been modified to give better reliability. In addition, the control module also sometimes needs replacing to add extra software features.

So the client says he will get back to you.

Unfortunately, as I can all too well attest, many do not "get back to you", so these bulky items accumulate and gather dust at my expense. After a bit of bullying for a decision, an OK may finally given but then the part may not be immediately available! So you now spend a good part of your life chasing that up too.

Finally, when the part does arrive and the symptom is corrected, you find that there is another fault hidden behind it – one which you couldn't possibly have known about until the first fault was fixed. All this conspires to make you look more like a doddering old fool which I might well be but am not yet prepared to admit.

OK, enough of my whining. Let me give you some real life examples of the above theme.

Items Covered This Month

- LG RT-42PX10 plasma TV (RF-043B chassis)
- Sharp Aquos LC-32GA4X LCD TV
- Panasonic TH-42PV500A HD plasma TV
- Hitachi HDD/DVD recorder – DV-D5163A (AU)
- Front-panel USB woes
- Ciba Corning blood gas analyser

The LG plasma

A 2004 106cm LG Plasma RT-42PX10 (RF-043B chassis) arrived in the back seat of a small European car. And according to its owner, it required immediate attention – the TV that is, not the car.

The symptom was no picture and no OSD (on-screen display) but the sound was OK. This model is only a standard definition (SD) set and is a Series 6 model. After the 50 or so screws had been removed, I reached for my multimeter and found that all the voltages read OK.

Had this been a Series 7 or later, I would just diagnose the SUS Board kit and change all three modules. However, with this model, you have to replace the more expensive one, two or three boards, which makes the estimate somewhat broad.

Fortunately, I had access to a set of boards from a set with a smashed screen.

And because it was the logical thing to do (and I'm lazy), I chose to replace the boards according to their ease of access.

The Z-SUS Board was OK and I had already tested the two drive boards by

unplugging them one at a time to see if anything appeared on the screen (it didn't). I then decided to change the Y-SUS Board which requires the removal of more hardware. This did the trick which was a relief, as the Control Board is a nightmare to reach.

The client accepted the estimate and a new board (6871QYH029R) fixed the problem. However, while the repair may seem simple enough, it's hard to imagine the logistics involved with moving and storing the fragile set while it was going through the various stages of repair. Any set over 81cm (32 inches) is really a 2-man job – especially older plasmas which can be quite heavy.

Sharp Aquos

A Sharp Aquos LC-32GA4X LCD TV was brought in with the complaint that it had gone dead after a loud "bang". Because it was an older model, it was much more complex, expensive and heavier than its modern counterparts.

I removed the back and four layers of boards and metalwork to reach the power supply board. The top of this board looked pristine but underneath there was a large black patch, both on the board itself and on the display beneath.

I cleaned up the mess and this revealed that the circuit had arced between two board tracks and melted a section of copper at the output of the bridge rectifier. The main fuse (F1702T63AH) had blown and the Triac (TRA1701 M1661P) – which can handle 16A 600V – had gone open circuit.

Despite going over the board several times, I could find no reason why this had happened. What I did find, however, was that the plastic had melted around the pins of the main plug on the figure-8 cable and this was also badly marked. But was this the cause of the problem or the result?

Anyway, at present I am waiting to source the Triac from somewhere, along with the circuit diagram (sounds familiar, doesn't it?). From what I can

New Lower DSO Prices for 2010!

Shop On-Line at emona.com.au

GW GDS-1022 25MHz

- 25MHz Bandwidth, 2 Ch
- 250MS/s Real Time Sampling
- USB Device & SD Card Slot

ONLY $499 inc GST

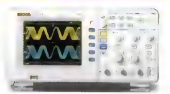

RIGOL DS-1052E 50MHz

- 50MHz Bandwidth, 2 Ch
- 1GS/s Real Time Sampling
- USB Device, USB Host & PictBridge

ONLY $713 inc GST

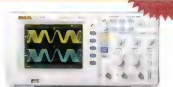

RIGOL DS-1102E 100MHz

- 100MHz Bandwidth, 2 Ch
- 1GS/s Real Time Sampling
- USB Device, USB Host & PictBridge

ONLY $966 inc GST

Sydney
Tel 02 9519 3933
Fax 02 9550 1378

Melbourne
Tel 03 9889 0427
Fax 03 9889 0715

email testinst@emona.com.au

Brisbane
Tel 07 3275 2183
Fax 07 3275 2196

Adelaide
Tel 08 8363 5733
Fax 08 8363 5799

Perth
Tel 08 9361 4200
Fax 08 9361 4300

web www.emona.com.au

EMONA

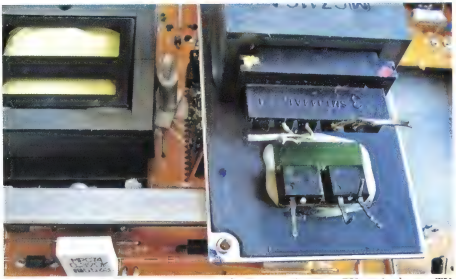

This is the faulty MC301 module inside the Panasonic TH-42PV500A plasma TV set. Note the missing legs off one of the two 2SK3674 FETs.

deduce, the Triac's only function is to reduce mains power surges and by shorting it out, I can get +340V at the output of the bridge rectifier and across what I call the "big bang parts". I also managed to get outputs from all the power rails, so my feeling is that it is probable that the only damage is to the Triac, the power lead, the fuse and the PC board track.

My theory is that an insect probably wandered across this gap and was vaporised but I have no proof. A new power supply was far too expensive to make the repair worthwhile and so I ended up with the set and the client bought a new one.

The question now is how long do I hold onto it for? Do I just try using it with the Triac shorted out (bearing in mind that it is a big job to reinstall the power board) or do I pay to have it removed as e-waste? And if I do repair it, what do I do with it? I don't need any more TV sets and if I sold it, I would have to offer some sort of warranty.

Panasonic TH-42PV500A

Because of the cost of disposing of e-waste, I am often offered faulty late-model sets for free. In one instance, I was offered a 2005 Panasonic TH-42PV500A HD Plasma which was having intermittent problems with the picture. When I went to pick it up, the probable reason was immediately obvious – the property was located just 100 metres from the surf.

Anyway, the client was very obliging and helped me put it into the van for the trip back to my workshop. When I got there, I placed the set on the bench and, ignoring the signs of rust and corrosion, plugged it in and switched it on. A beaut picture and sound immediately appeared and it was still working three hours later when I unplugged it and took it home for the rumpus room in my basement.

The rest of the week was wet and humid, with lots of rain. The rumpus room doesn't exactly have the best ventilation in our home and when I eventually got around to connecting the set up and switching it on, there was loud bang and then silence. Something had obviously gone seriously wrong but what?

Removing the back revealed just how damp and corroded it was inside. I removed the P-Board and examined it carefully. It is a large board with modules soldered directly onto it. One of these modules, MC301, consists of two FETs, two diodes and a transformer, all glued onto an aluminium heatsink. And one of the 2SK3674 FETs had lost two of its legs.

On the main board, I found that a surface-mounted 22Ω resistor had gone open circuit, while Q333 (2SB-1386) and Q332 (2SD2048) were both short circuit.

The MC301 (MP4451) module is the +190V V SUS power supply and is obviously designed not to be repaired to component level, as all the parts are glued onto the aluminium. I cannot even find part numbers for these parts so I would have to order and pay the price for the entire power board (ETXMM563MDK) and hope that the rest of the set is OK.

I now face a dilemma that's regularly faced by my clients – whether to proceed or not! Is it really worth it? I need to procrastinate more about it.

Hitachi HDD/DVD recorder

Not all repairs require acres of space – some require more. Ironically, this job involved a tiny Hitachi DV-D5163A (AU) HDD/DVD recorder which simply displayed a "Please Wait" message. But how long do you wait until you give up?

Now the reason why this job took up lots of room is that it has to be connected to a TV. You also need space to connect all the parts after they have been removed from the case, plus extra space for the test equipment.

Initially, I thought that the hard drive was the problem and the client really wanted me to save the data, as there were lots of family videos on it. I could hear the 160GB hard drive trying to spin and boot up but could get nothing out of it, so I installed it

Servicing Stories Wanted

Do you have any good servicing stories that you would like to share in *The Serviceman* column in SILICON CHIP?

If so, why not send those stories in to us? In doesn't matter what the story is about as long as it's in some way related to the electronics or electrical industries, to computers or even to car electronics.

We pay for all contributions published but please note that your material must be original. Send your contribution by email to:

editor@siliconchip.com.au

and be sure to include your full name and address details.

in an external USB drive case and connected it to my PC. But although the computer recognised the drive, it couldn't access any of the files on it.

I then connected the drive as a slave device inside the computer but it still couldn't read the files. I also tried connecting a new hard drive to the Hitachi Recorder but that made no difference to the fault symptom.

I had already checked the power supply and found all the voltages to be OK. I then downloaded a service manual and followed the "Fault Finding Tree" but again drew a blank.

During this time, I had slowly been coming around to the fact that there might be a problem with the controller module, despite the problem not showing up when I followed the fault tree. I had noticed that I couldn't get the DVD drawer to open and close, so I thought I would try swapping it over with one from a computer. I chose an old Sony IDE drive and apart from the special anchoring points, I could electrically attach it quite easily.

When I did this, everything suddenly started to work properly. So the solution was to get a new DVD recorder drive.

I had purchased some new dual-layer LG IDE drives for other PCs so I tried installing one of these but it too wouldn't work. I then realised that I would have to buy a new drive from Hitachi (Part No. TJ04595R) at a cost price of $255.61 plus labour.

As you can imagine, this would take a big bite out of the cost of buying a new one with more up-to-date technology and a full warranty. The result is that I have been left in limbo, with less available space, while a decision is made by the client on whether or not to go ahead.

I suspect that I will eventually end up by paying for it to go to e-waste.

My next story concerns a computer problem and comes from P. W. of Hope Valley, SA. Here's how he tells it . . .

Front-panel USB woes

I recently did it again, "it" being that I agreed to look at a friend's computer despite a New Year's resolution to simplify my life. I had put it off for as long as I could because past experience with PC repairs told me that it would take about three hours minimum of my time. However, they are good friends and have helped me with car repairs in the past, so I got down to work.

Their PC simply would not boot into Windows XP and my friend had not backed up any files. As a result, I opted for a re-install over the top of the existing system. That way, they would be able to recover personal files, particularly family photos, whereas reformatting the hard drive would wipe everything.

The re-install proceeded normally and after installing the motherboard and video drivers, I checked the previously installed My Documents folder and was pleased to find all the files intact. Thinking my job was done, I then started packing the machine up when I noticed a note from my friend that said: "Could you please check the front USB sockets?"

I re-booted the machine and tested the front USB ports with a flash drive. Sure enough there was no

~AND FOLLOWED THE "FAULT FINDING TREE"...

response. Conversely, when I plugged the drive into each of the rear USB ports, it was immediately recognised so the USB interface on the motherboard was working OK.

At my request, my friend had included the motherboard manual with the machine. I opened the case and checked the manual to identify the location and pin-out configuration of the connections to the front USB ports. There were two ports and the connectors were labelled and appeared to be connected to the corresponding pins in the correct order.

I then wondered whether there was a BIOS setting related to the USB ports so I restarted the machine and entered the BIOS set-up. The relevant section in the manual indicated that it was possible to disable and enable all or any of the front and rear USB ports. However, when I navigated to the USB section in BIOS, the only options were to either enable or disable all USB ports.

I also did a Google search for the motherboard type and found some entries that indicated that the manufacturer had changed the USB pin-out connections for this model. However, a recheck of the manual and the labels on the pins showed no discrepancy.

Not wanting to return the PC in an incomplete state, I decide to explore the front panel connector in more detail. After about 10 minutes of prodding, I discovered that the front panel could be detached by removing two screws, depressing four plastic tabs and then using a thin-blade screwdriver to prise the case over the CD burner escutcheon.

The two front USB ports are mounted on a small circuit board which is fixed to the front panel by two screws. A close visual check showed that the ground, D+ (data positive) and D- (data negative) connections were all OK, as were the PC tracks running to them. On the other hand, the +5V PC track appeared to be about the thickness of a human hair and was running between two solder pins.

This track also looked suspicious because it was shiny whereas the other tracks were covered in a protective green lacquer. What's more, a check with a multimeter revealed an open circuit between the wiring connection and the +5V pins on the USB sockets. This open circuit was quickly bridged with a flying lead and the unit reassembled.

As expected, that fixed the problem. My theory is that the front USB connectors originally worked but the extremely thin +5V PC track was inadequate to supply the load currents of USB-connected devices. As a result, the track overheated and eventually fused, although the break wasn't obvious.

Faulty fault detection

My next item comes from T. M. of St Agnes, SA who also contributed the items on faults in biomedical equipment in last month's issue. It concerns another blood gas analyser and has an interesting twist to it. Here it is . . .

I recently got a call from the lab manager in one of our country labs concerning a Ciba Corning 278 blood gas analyser. It had simply stopped working correctly, with nothing more than garbage on the display.

Now this particular model has a tendency for the power supply failure detection circuitry to itself fail. The switchmode power supply is slotted into the rear of the machine at the bottom and is easily removable. All the connections are at one end except for a single brown wire that emerges from the centre of the board and is threaded into the main card cage. This is the signal wire for the power supply failure detection circuit.

Anyway, this supply problem is a known fault and to fix it, we simply disconnect the signal wire and the analyser then works fine. In other words, it's the power supply failure detection circuit that's always the problem, not the supply itself.

What's more, because the units always work fine without the faulty protection circuits, we don't repair them. Doing so would only invite further problems down the track.

In this particular case, I asked the lab manager to unscrew the mounting screws for the power supply and slip it out half way. I then instructed her to find the brown wire and cut it, then tape the ends to insulate them and bolt the supply back in.

I believe she hacked through the wire with her office scissors, probably thinking "What am I doing?" She couldn't believe that this would get the unit going and quizzed me about the procedure quite a few times . . . "Don't we need that little brown wire? When are you coming to fix it?"

Of course, the unit then worked fine and we never had a problem with that particular power supply again. SC

TOOLS FOR YOUR TRADE!

Semiconductor Component Analyser

new

Intelligent semiconductor analyser that offers simple identification and testing for a variety of 2 or 3-pin devices. Type and lead identification as well as forward voltage, test current and other parameters for transistors.

- Automatic type identification of Bipolar Junction Transistors (BJTs), Darlington, MOSFETs, JFETs, triacs, thyristors, LEDs, diodes & diode networks
- Automatic pinout identification
- Gain and leakage current measurement for BJTs
- Silicon and germanium detection for BJTs
- Forward voltage and test current
- Dimensions: 100(W) x 71(H) x 27(D)mm

QT-2216

$129.00

USB Cassette Deck

new

Record cassette tracks to your computer via USB or play back through the built-in SW speaker. You can also run the line level outputs to an external amplifier and use it as a component cassette deck.

- Dimensions: 178(L) x 72(H) x 178(W)mm

GE-4054

$79.95

80W Portable Fold-Up Solar Kit

A convenient alternative energy solution for those on the move. Fold it away and store it in the carry bag when not in use, then when you set up camp just fold it out so your batteries are being charged.

new

- Heavy duty metal carry handle and latches
- Durable nylon carry bag
- Plastic protective corners
- Charge controller included
- 4m battery lead with alligator clamps

ZM-9130

Normally $649.00

Due Mid July

Special Introductory Price

$599.00

SAVE $50.00

Outdoor IP65 Rated Tri-tech Microwave/PIR Sensor

new

Most PIRS are generally not suitable for outdoor use. The dual lenses, use of two synchronised PIR sensors and microwave technologies, plus a movement detection algorithm built in reduces false alarms and with the IP65 rating makes this sensor suitable for outdoor security applications. It also has NO and NC alarm outputs, tamper switch and LED alarm trigger indicator. See website for specifications.

- All-in-one motion sensor
- Automatic background analysis
- Selectable PIR & microwave sensitivity
- 12VDC power
- Dimensions: 168(H) x 95(W) x 65(D)mm

LA-5042

Swivel Bracket

LA-5043 $19.95

$149.00

SD/MMC Card Webserver In a Box

Refer: Silicon Chip Magazine November 2009

Host a website on a common SD/MMC card with this compact Web server In a Box (WIB). It connects to the Internet via a modem/router and features inbuilt HTTP and FTP servers, SMTP email client, dynamic DNS client, RS232 serial port along with four digital outputs and four analogue inputs. Requires a SD memory card and some SMD soldering. Requires a 6-9VDC power adaptor (use plugpack MP-3146 $17.95)

- Includes PCB, case & electronic components

XC-5489

$89.95

Project kit of the Month

5.5" Graphics Tablet

new

Using a graphics tablet is completely natural, more comfortable and far more accurate than a mouse, with higher resolution and pressure sensitivity. The pen has user defined buttons and "hotspots" around the border of the tablet. Paint, draw, write or touch up. Absolutely essential tool for graphics designers, photographers or other creatives.

- Battery and software included
- Windows 2000, XP, Vista or Mac
- Dimensions: 205(W) x 190(H)mm

XC-0356

$69.95

Multifunction Environment Meter with DMM

new

Typical sound applications include checking acoustics of recording studios, auditoriums and professional hi-fi installations. The light and humidity meters are ideal for video photographers, greenhouse and hydroponic setups, etc.

Features:

- Sound
- Light
- Humidity
- Temperature plus other multi meter functions
- 4000 count
- Cat III 300V
- Dimensions: 170(H) x 78(W) x 48(D)mm

QM-1594

$129.00

Professional Laser Distance Meter

Distance, area, volume or indirect measurement, this does it all in metres, feet or inches. It also adds, subtracts and takes min/max measurements. Invaluable for architects, estimators, builders or renovators. Battery and case included.

new

- Backlit LCD
- Laser accuracy
- Dimensions: 110(L) x 47(W) x 28(H)mm

QM-1621

$199.00

NEW LABRADOR STORE

1A / 142 Brisbane Rd
Labrador QLD 4215
Ph: (07) 5537 4295

Dual HDD 2.5"/3.5" SATA Dock

We've been waiting years for an easier way to clone drives and here it is. This dual SATA dock will accept 2 x 2.5" or 2 x 3.5" (or one of each) SATA HDDs/SSDs. Just dock a drive with a complete install of an operating system, dock an empty drive and press the big red clone button. Can also be used as a regular SATA dock with mountable drives on your operating system. USB 2.0 or eSATA for connection to PC. Note: HDD not included

new

XC-4695

$89.95

Mini Wireless Weather Centre

new

Keep up-to-date with current and forecasted atmospheric conditions at a glance. With two small outdoor weather sensors, it precisely measures, records and forecasts all the basic weather parameters and displays them on an LCD screen. Handy features include three forecast icons based on changing barometric pressure.

- LCD screen: 135(W) x 34(D) x 140(H)mm
- Outdoor wind sensor: 110(H) x 180(D)mm
- Temp/bar/humidity sensor: 57(W) x 57(D) x 160(H)mm

XC-0349

$99.00

ABS Instrument Cases with Purge Valves

new

With superb robust moulded design to rival the more expensive brands, this brand new range of quality instrument cases are our best yet. They come with all the quality inclusions such as airtight purge valves, ribbed ABS construction, stainless steel hinge pins, O-ring seals and very solid catches. The lids are lined with removable egg-shell foam and they come with pluck foam insert with an extra layer of egg-shell foam. All backed by a 3 year warranty.

MPV2
Internal: 300(W) x 218(D) x 105(H)mm
External: 305(W) x 228(D) x 115(H)mm
Cat. HB-6381 $69.95

MPV4
Internal: 400(W) x 322(D) x 145(H)mm
External: 410(W) x 332(D) x 155(H)mm
Cat. HB-6383 $99.95

MPV7
Internal: 480(W) x 355(D) x 180(H)mm
External: 490(W) x 365(D) x 190(H)mm
Cat. HB-6385 $129.00

MPV8 With Wheels
Internal: 512(W) x 292(D) x 180(H)mm
External: 522(W) x 302(D) x 190(H)mm
Cat. HB-6387 $189.00

Pencil Butane Torch

Pocket sized gas torch for heatshrinking, soldering etc and uses standard butane gas. Adjustable flame, all metal construction.

• Size: 205(L) x 13(Dia)mm
TS-1667

$11.95

7 Piece Screwdriver Set

High quality, bright red drivers you can find easily. Insulated right to the tip and rated to 1000V.

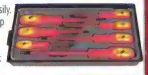

Drive sizes: Flat: 1.2 x 6.5 x 150mm, 1 x 5.5 x 125mm, 0.8 x 4 x 100mm, 0.6 x 3.5 x 75mm.
Phillips: #2 x 100mm, #1 x 80mm, #0 x 60mm. Includes storage box.
TD-2022 WAS $24.95

$19.95
SAVE $5.00

188pc Rotary Tool Accessories Pack

new

With 188 pieces at a substantially lower cost than the hardware store brands, this great value kit has every rotary tool attachment that you'll ever need. All parts are neatly organised in a case so you'll have no trouble finding the bit you need - including drilling, sanding, grinding, cutting and polishing attachments. See website for full list of contents.

$19.95

• Case measures: 210(W) x 320(H) x 52(D)mm
TD-2458

Super Bargain Autoranging DMM

An autoranging multimeter for checking all sorts of things!

• CAT III 600V Autoranging
• Display: 2000 count
• Auto power-off
• Max hold
• Audible Continuity
• Diode test
• Dimensions: 53(W) x 108(H) x 32(D)mm
QM-1528 WAS $24.95

$14.95
SAVE $10.00

Low Cost DMM

This full featured digital multimeter is the perfect gift for the home handyman or young experimenter and will give years of reliable service. It features a huge 10A DC current range as well as diode and transistor testing functions. Also measures AC & DC volts and resistance. At this price you should buy two!

$9.95

• Size: 125(H) x 68(W) x 23(D) mm
QM-1500

100 Piece Driver Bit Set

This is an excellent driver bit set that contains just about every bit you could ever use. It has a magnetic holder, adaptors, Phillips bits, slotted bits, Torx, tamperproof, pin drive, and even a wing nut driver - Fantastic. See website for full listing
TD-2038 WAS $19.95

Driver handle to suit
Cat. TD-2032 $6.95

$14.95
SAVE $5.00

1 Watt LED Torch with In-built Car Charger Plug

Low battery? No worries, this super-bright 1 watt LED torch conveniently recharges in your car's cigarette lighter socket. With a robust aluminium alloy housing it can take a fair amount of abuse and still shine as brightly as the day you bought it.

• Dimensions: 160(L) x 35(Dia)mm
SL-3381

$19.95

Pro-Style Pen DMM

This ruggedly designed and built pen styled DMM gives the flexibility of being able to look at where your probes are to see the reading. No need to look away to where your DMM is located because it's right there in your hand. This precision instrument is made using modern double moulding techniques to make it tough enough to be used every day and includes nifty features like having a spot to put the probe guard when in use. 7 functions in the one unit.

$39.95
SAVE $10.00

• 4000 count
• Cat III 600V
• Basic DCV accuracy: 0.800%
• Dimensions: 230 (L) x 35(W) x 20(D)mm
QM-1498 WAS $49.95

Auto Ranging Cat IV 600V Digital Multimeter

An excellent multimeter that features a large, easily read display and carries an IP67 environmental rating. This means the multimeter is waterproof and will not be damaged if accidentally dropped into water or left out in the rain etc. The meter has data hold and relative measurement capabilities and is housed in a robust, double moulded case. Includes leads and user manual.

• 4000 count
• Cat IV 600V
• Auto power-off
• Data hold
• Diode test
• 10 A current range
• Double moulded case
QM-1326 WAS $79.95

$69.95
SAVE $10.00

Heatshrink Assortment Trade Pack

All the heatshrink the technician, tradesman or serious hobby user will ever need. The pack contains 160 lengths of different sizes from 1.5 to 10mm in black, red and clear in a handy storage case.

• Case size: 205(L) x 110(W) x 35(H)mm
WH-5524 WAS $19.95

$14.95
SAVE $5.00

TOOL KITS

30 Piece Tool Kit with Case

The tools are held securely in a zip-up case. Cutters, pliers, tape measure, sockets, screwdriver bits and more. See website for detailed contents.

• Case measures 210(L) x 160(W) x 48(H)mm
TD-2166

$24.95

29 Piece Tool Kit with Case & Torch

DIY minor repairs are a breeze with this 29 piece tool kit. All the basic essential tools, including a torch, all stored in a stylish silver case.

• Torch requires 2 x AA batteries (not included)
• Case measures: 200(L) x 145(W) x 45(H)mm
TD-2066 WAS $34.95

$24.95
SAVE $10.00

DON'T JUST SIT THERE, BUILD SOMETHING

TOOLS FOR YOUR TRADE

Electrical Tester with Polarity Checking and Light

Designed for maximum safety. The probes have a good to grip and are IP64 rated. Testing voltage is simple and the unit's LED display will indicate to the nearest voltage up to 690V with polarity indication. This unit will also check for low impedance, continuity, do a single pole phase test and show rotary field indication. A LED light is included for dimly lit locations.

- Requires 2 x AAA batteries (included)
- Voltage test works without batteries.

QP-2286

$49.95

THERMOMETERS

IR Non-Contact Pocket Thermometer

Take quick and accurate temperature measurements of any surface without touching it. Handy for the house or garage. LCD displays temperature in Celsius and acquires a reading in less than two seconds.

- Accuracy: ±1%
- Range: -50 - 220°C
- Handy pocket clip
- Batteries included
- Size: 85(L) x 15(Dia)mm

QM-7219

$49.95

Non-Contact Thermometer with Dual Laser Targeting

Measure the temperature of any surface from a safe distance with this compact sized non-contact thermometer. With a wide temperature range and laser targeting, this portable instrument is easy to use for quick and accurate temperature checking of any surface. With an 12:1 distance to spot size, you can get the temperature of almost the exact spot in most cases. With the backlight, the temperature can be read in low light conditions. Holster included.

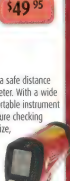

- Laser Pointing Targeting
- Wide Temperature Range
- 12:1 Distance to spot ratio
- Backlit LCD
- Holster Included
- Dimensions: 146(L) x 104(W) x 43(D)mm

QM-7221 WAS $99.00

$89.00 SAVE $10.00

Sound Level Datalogger

new

Designed for recording and logging up to 129,920 samples with A or C weighting at intervals from 1 second to 14 hours sound pressure level measurements for quality control, illness prevention, acoustic design or any other type of environmental sound measurement. The response time may be set at fast or slow for capturing rapid transient events. This product has been modified to calculate SPL via proper log averaging rather than the inaccurate arithmetic average used on the original design. Battery and windsock included.

- USB interface
- Peak level measurement
- Over-range indication
- Manual or automatic start mode
- System requirements: Windows 2000, XP, Vista
- Dimensions: 140(L) x 28(W) x 21(H)mm

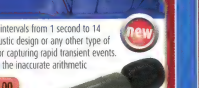

MORE INFO ONLINE

QM-1599

$149.00

Lithium Grease 400g

Long-lasting heavy duty lubricant grease for bearings, sliding mechanisms, battery terminals, chains, sprockets or other moving parts. White in colour so it forms a kind of thick, milky sea in the lubricated area. Reduce friction, protects against corrosion.

NA-1015

new

$9.95

Power Point and Leakage Tester

Thousands Sold

Test your power points using this versatile tester. It checks most types of power points within 110V to 240V for correct wiring and earth leakage circuit breaker trip levels.

QP-2000

$19.95

Compression Crimping Tool

A precision crimp tool that employs a ratchet action ensuring correct crimping pressure is applied for reliable, trouble-free compression BNC, RCA, PAL and F-type coaxial connectors. Adjustable compression depth.

TH-1801 WAS $69.95

$59.95 SAVE $10.00

IP68 3-Core Flex Joiner

Designed to enable the joining of mains 3-core flex cables while providing a robust and waterproof connection. Includes 3-way terminal block, but will also accommodate any connector that fits within the internal dimensions of the housing.

- IP68 rated
- AS/NZS3100
- Voltage rating: 250VAC
- Current rating: 16A max
- Accepts cables 6 - 10mm dia

PS-4068

new

$29.95

Gaffer Tape On Steroids

new

Just wrap this tape around your leaky pipe and it will bond in seconds. A self-fusing tape for a permanent air-tight and water-tight seal. It is designed for quick plumbing repairs, sealing hoses in your car/truck/boat, coating the ends of rope, wrapping tool handles etc. Resists fuels, oils, acids, solvents, salt water, road salt, UV rays.

NA-2829

$19.95

Cat IV Fixed Jaw Clampmeter

An ideal test instrument for electrical contractors. Compact and light with probe storage in the back for easy one-handed operation. Jaw opening is 16mm.

- AC Current: 200A
- Category: Cat IV 600V / Cat III 1000V
- Display: 2000 count
- Size: 190(H) x 62(W) x 42(D)mm

QM-1567 WAS $179.00

$129.00 SAVE $50.00

PLIERS & CUTTERS

Heavy Duty Wire Stripper / Cutter / Crimper

Designed for easy wire stripping of AWG 10-24 gauge cable (0.13 -6.0mm). The wire guide ensures the correct length is stripped a precision blade is incorporated for easy wire cutting. Also features quality crimping jaws.

- For 1.5 - 6mm terminals
- Spring return

TH-1827

$29.95

Fujiya 110mm Precision Side Cutters & Long Nose Pliers

FUJIYA

Both these cutters are precision ground and perfect for cutting super fine wire as well as for general workshop use. They also have insulated handles which are spring loaded for effortless use.

- 110mm long
- Soft grip handle

110mm Cutters
TH-2332 $34.95
110mm Long Nose Pliers
TH-2334 $34.95

$34.95 Each

180mm (7") Combination Pliers

These drop forged alloy steel pliers are made to rigid German DIN standards for electrical safety & mechanical strength. They will cut hard (piano wire) wire up to 1.6mm & soft (annealed copper, aluminium silver etc,) up to 4.0mm. Non slip double inset handles. GS approved.

TH-1984 WAS $19.95

$14.95 SAVE $5.00

Limited stock on sale items.

All Savings are based on Original RRP

Jaycar Electronics
Better, More Technical

SOLDERING EQUIPMENT

40W Temperature Controlled Soldering Station

An ideal entry-level soldering station for the hobby user. Comes with a lightweight iron with anti-slip grip and tip cleaning sponge. It also has a 4mm banana socket connected to mains earth for soldering static-sensitive components.

- temperature range: 150-450°C
- Dimensions: 135(L) x 82(W) x 70(H)mm

TS-1620

$59.95

Spare tip 0.5mm conical TS-1622 $14.95

Gas Soldering Iron / Torch Kit

Everything you need to solder, silver solder, braze, heatshrink, strip paint etc. Refillable with stand, extra tips, torch and cutting attachment.

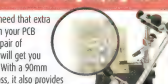

- 3 soldering tips
- 1 torch attachment
- 1 rope cutter
- 178mm long

TS-1112

$39.95

portasol Super Pro Gas Soldering Tool Kit

This kit contains a Portasol Super Pro Gas Soldering Iron, featuring 90 minute run time, 10 second fill, maximum 1300°C temperature & 40 second heat up.

- 2.4mm double flat tip (TS-1322)
- 4.8mm double flat tip (TS-1323)
- Hot air blow (TS-1324)
- Hot knife tip (TS-1325)
- Hot air deflector.
- Quality storage case
- Cleaning sponge and tray

TS-1328

$159.00

25 Watt Soldering Iron

Ideal for the hobbyist and handy person. Has a stainless steel barrel and orange cool grip, impact resistant handle.

TS-1465

Spare tip available

TS-1466 $3.95

$13.95

PROJECT KITS

High Performance 12V Stereo Amplifier

Refer: Silicon Chip Magazine May 2010

An ideal project for anyone wanting a compact stereo amp. It could be used for busking or any application where 12V power is available. No mains voltages, so it's safe as a schoolies project or as a beginner's first amp. Performance is excellent with 20WRMS per channel at 14.4V into 4 ohms and THD of less than 0.03%. Shortform kit only. Recommended heatsink

Cat. HH-8570 $6.95

- PCB: 95 x 78mm
- 12VDC

KC-5495

$44.95

Low Capacitance Adaptor for DMM Kit

Refer: Silicon Chip Magazine March 2010

Many modern multimeters come with capacitance ranges, but they're no good for very small values. This kit is a nifty little adaptor that allows a standard digital multimeter to measure very low values of capacitance from less than one picofarad to over 10nF. It will allow you to measure tiny capacitors or stray capacitances in switches, connectors and wiring. The kit is complete with PCB, components and case. All you'll need is a 9V battery and just about any modern DMM.

$34.95

KC-5493

Solar Powered Shed Alarm Kit

Refer: Silicon Chip Magazine March 2010

A lot of valuable items such as tools are kept in sheds. Not just for sheds, but any location where you want to keep undesirables out but don't have access to mains power: a boat on a mooring, for example. What you need is a simple solar powered alarm that works from a variety of sensors - just what this kit does. It has 3 inputs so you can add extra sensors as required, plus all the normal entry/exit delay etc. Short form kit only - add your own solar panel, SLA battery, sensors and siren.

Supply voltage: 12VDC
Current: 3mA during exit delay; 500_A with PIR connected
Exit delay: 22 seconds
Entry delay: approximately 5s to 30s adjustable
Alarm period: approximately 25s to 2.5minutes adjustable

KC-5494

$29.95

PCB Holder with Magnifying Glass

Any time you need that extra bit of help with your PCB assembly, this pair of helping hands will get you out of trouble. With a 90mm magnifying glass, it also provides an extra pair of eyes.

- Dimensions 78(L) x 98(W) x 145(H)mm

TH-1983

$12.95

Power Microscope Kit

With reflecting and transmission light, this power microscope will enable you to see the closest details under a monocular eyepiece or projection screen. Easy to assemble and comes with a ready made specimen for immediate exploration of the microscopic world. Requires 2 x AA batteries.
See website for full kit contents.

- Dimensions: 95(L) x 163(H) x 75(W)mm
- Power 50X-100X, 150X-300X, 300X-600X microscope

QC-3243

$29.95

Desktop LED Magnifying Lamp

No more fluorescent tubes to replace on your magnifying lamp. Sixty LEDs provide ample illumination, and the 3x and 12x magnifying lenses will enable you to see what you're working on with remarkable clarity and detail. Being LED, there's no delay in startup and they'll never need replacing. Ideal for hobbies, modelmaking or jewellery.

- Dimensions: 320(H) x 95(Dia)mm

QM-3544 Limited Stock

$49.95

Stainless Cutter / Pliers Set

Set of five 115mm cutters and pliers for electronics, hobbies, beading Etc. Stainless steel with soft ergonomic grips.

Contents:

- Flush cutters
- Long nose pliers
- Flat nose pliers
- Bent nose pliers
- Round nose pliers

TH-1812

$34.95

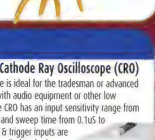

OSCILLOSCOPES

10MHz Handheld Oscilloscope

Complete portable unit at the size and cost of a good multimeter. With high sensitivity (down to 5mV/div) and extended scope functions, its features include bright wide view LCD, full automatic setup for volt/div & time/div, true RMS and dB measurements, screen hold function, low battery detection, auto power off and 1MHz input bandwidth. See website for full specifications.

QC-1916 WAS $299.00

$269.00

SAVE $30.00

10 MHz Single Trace Cathode Ray Oscilloscope (CRO)

This entry-level oscilloscope is ideal for the tradesman or advanced hobbyist who is working with audio equipment or other low frequency applications. The CRO has an input sensitivity range from 5mV to 5Volts per division and sweep time from 0.1uS to 100mS per division. Signal & trigger inputs are BNC connectors and the supplied probe has a 10:1 attenuator as standard. The instrument is housed in a strong steel case and has a 70mm CRT with 5mm square graticule. See website for full specifications.

QC-1920 WAS $149.00

$139.00

SAVE $10.00

Mini Beach Vice

This strong lightweight aluminium vice will clamp to surfaces up to one-inch thick and hold material up to two-inches thick. Great for hobby work or as a light duty workshop bench vice.

TH-1764

$14.95

All Savings are based on Original RRP Limited Stock on sale items

Better, More Technical Limited stock on sale items. **To order call 1800 022 888**

DON'T JUST SIT THERE, BUILD SOMETHING

TOOLS FOR YOUR TRADE

NEW BOOKS

Getting Started with Arduino

Arduino is an open-source development platform that enables experimenters to configure an open hardware design for a single board microcontroller. Aimed at the first-timer. It also includes a project to build complete with how to write the code to make it work.

- Softcover 118 pages
- 216 x 140mm

BM-7130

$23.95

Practical Arduino

It takes you beyond basics quite quickly and shows you how to make up a typical application/ design. Examples of typical projects, 14 in all are worked, ranging from simple to quite complex. This is a necessity as it goes to the heart of Arduino.

- Softcover, 422 pages
- 290 x 200mm

BM-7132

$57.95

How to Test Almost Everything Electronic

Everything from setting up a test and work area to using test equipment - multimeters, oscilloscopes, signal generators, signal tracers etc. It also covers testing and measurement methods, fault finding without circuit diagrams, component testing and some highly specialised measurement in applications such as audio and TV.

- Softcover 326 pages
- 190 x 130mm

BM-7200

$42.95

Solar that Really Works Books

A highly informative and practical guide showing the do's and don'ts of DIY solar installation. From caravans to fishing lodges, it features detailed descriptions of working solar systems with illustrations. Written by acclaimed Australian author Collyn Rivers.

- Softcover, 82 pages, 290 x 210mm

BE-1535 $42.50

$42.50

Also available in this series:

Motorhome Electrics

BE-1536 $42.50

Solar Success BE-1537 $47.50

PRE-ASSEMBLED MODULES

12VAC Motor and Lamp Controller

With the addition of a rectifier, it can also be used to control DC motors and if you add a 100k or 200k pot, you can control 24 or 48V devices. Suitable for iron core transformers only.

- Loading capacity: for resistive or inductive loads up to 10 A max
- Dimensions: approx. 87(L) x 60(W) x 32(H)mm

AA-0347 WAS $54.95

$44.95 SAVE $10.00

Tank Level Indicator Module

No sensor is required as it works by simply sensing which conductor is submerged. Not suitable for combustible liquids such as petrol or diesel. Requires 2 x AA batteries.

- Operating voltage: 3VDC
- Current consumption during measurement: max 50mA
- Measurement current: 50µA per channel
- Max. cable length: 100 m
- Dimensions: 120(L) x 70(W) x 20(H) mm

AA-0370 WAS $49.95

$39.95 SAVE $10.00

6-in-1 Solar Educational Kit

Build any one of six different projects from the parts in the kit. No tools, soldering or glue required. All the parts snap together with spring terminals for the wiring. The instructions are excellent with extremely clear illustrations detailing every step. The finished projects are solar powered, but can also be powered by the light from a household 50W halogen light.

Projects:

- Windmill • Car • Dog • Plane • Airboat
- Revolving Plane • Suitable for ages 10+

KJ-8926

THOUSANDS SOLD

$24.95

NEW ANATOMY MODELS

4D Human Skin Model

Perfect skin section model up to medical educational level. Includes removable hair and skin layers with extra acne parts. A fantastic educational tool for schools and medical practices.

- 25 pieces included
- Recommended for ages 8+

GG-2377

$24.95

4D Human Head Model

Learn all about how the brain works and the structure of the skull. A fantastic cutaway model for education in medical practices and schools.

- 14 pieces included
- Recommended for ages 8+

GG-2379

$24.95

4D Female Reproductive System Model

Includes detachable organs with cross section parts and internal details.

- 16 parts with stand and assembly guide
- Recommended for ages 8+

GG-2388

$24.95

SOLAR KITS

Solar Powered Planetarium

Young astronomers will love this mini solar kit. Easy to build and loads of fun. Not only does it provide a hands-on lesson about how solar power drives a motor, but also gives some educational pointers on planets and the solar system. Operates from a 50W halogen light as well. See website for full kit contents. Suitable for ages 10+

KJ-8927

$24.95

3-in-1 Solar Robot Kit

An exciting project that will keep the kids occupied for hours! This 3-in-1 solar robot kit easily transforms into three intergalactic robotic designs. See how solar power drives the motor forcing these 3 robots to make different movements. If it's a cloudy day, then have some indoor fun and use a 50W halogen light. Projects include a tank, robot and a scorpion.

- Suitable for ages 10+

KJ-8928

$24.95

Mini Solar Bullet Train Kit

All aboard the solar bullet train! This kit is an excellent way to teach how solar power is used to drive a small motor. Perfect for train enthusiasts!

- Includes 18 parts, 4 screws, and 1 mini solar panel
- Suitable for ages 10+

KJ-8929

$14.95

Solar Powered/Dynamo Robot Kit

Build your own solar powered robot. Also supplied with a hand cranked dynamo for alternative power source. Robot moves forward and reverse. Hours of robotic fun.

- No batteries needed
- Recommended for ages 8+

KJ-8821

$29.95

All Savings are based on Original RRP

Limited stock on sale items.

Jaycar Electronics
Better. More Technical

HDMI Over Cat 5/6 Extender

new

Most HDMI over Cat 5/6 extenders available uses two cables for data and signal transmission. This extender only utilises one Cat 5/6 cable reducing the cable costs further on transmission over great distances. Both unshielded twisted pair (UTP) and shielded twisted pair (STP) cables may be used, however shielded is recommended.

$149.00

AC-1681

4 Port HDMI Switcher with SPDIF/Coaxial Audio Splitter

HDMI integrates audio and video signals, however it results in less than optimal audio output. This 4 port HDMI switcher separates the audio signal from the HDMI interface and transmits it to an amplifier by SPDIF or coaxial (RCA). Remote included.

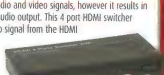

new

- 4 x HDMI inputs, 1 x HDMI output with coax and SPDIF audio output
- HDMI 1.3b compliant
- HDTV 1080p resolution
- Amplifier bandwidth 2.25Gbps/225MHz
- Dimensions: 155(W) x 70(D) x 23(H)mm

$119.00

AC-1625

High Quality Lightweight Stereo Headphones

Ultra-lightweight stereo headphones that provide outstanding performance and comfort. Featuring high output drivers with neodymium magnets, they produce crystal clear sound with crisp highs and smooth bass response. Soft leatherette swivel ear pads, adjustable headset and 1.2m lead.

- Frequency response: 150Hz - 20kHz
- Weight: 80 grams

$24.95

AA-2061

Also available: **High Quality Full Cup Stereo Headphones** Cat. AA-2063 $34.95

1 Farad Capacitor

High farad capacitors act as surge current reservoirs for your amplifiers and other electrical equipment. Integrate these capacitors into your audio system to avoid voltage drops from high transient current peaks.

new

- Gold plated terminals
- Mounting brackets and hardware included
- Attractive brushed aluminium finish
- Digital voltage display
- Dimensions: 260(H) x 75(Dia)mm

$99.00

RU-6754

VIFA SPEAKERS

Vifa P17WJ 6.5" Woofer

A brilliant and versatile driver that can be designed to perform to 40Hz or lower. Features include a cast magnesium basket, mineral filled polycone and smooth frequency response. Ideal for bass reflex enclosures of 10 - 30 litres.

Power handling: 70WRMS

$99.00

Nominal impedance: 8 ohms
Frequency response: 37Hz - 5kHz
Sensitivity: 88dB SPL @ 1W, 1m

CW-2106

Vifa D25AG Tweaker

Over the last 20 years this iconic tweeter has found its way into countless OEM hi-fi, home theatre designs and high end speaker kits. Features an aluminium alloy diaphragm with high precision phase shield and butterfly voice coil assembly with Ferro fluid cooling to ensure high power handling. A double chamber also provides a resonant frequency of 850Hz. Add one to your project or give your current speakers a new lease of life.

new

Power handling: 100WRMS
Nominal impedance: 6 ohms

CF-2020

$69.95

VGA to Composite and S-Video Converter

A compact and versatile device that lets you use your wide screen plasma or LCD screen as a computer monitor for gaming or presentation use. Great for watching DVDs, gaming, presentations, or just having a big screen on your computer. No software is required.

- Supports composite video and S-video output.
- Up to 1024 x 768 resolution
- Display on both PC and TV simultaneously
- Input and output leads included
- Powered from USB Port
- Size: 100(L) x 130(W) x 22(H)mm

$99.95

XC-4871

HDMI Leads with Extender

Normally you can't run an HDMI cable over a maximum of about 5 metres without using a booster. These cables solve this problem by adding an extender to give you a range of 15 or 20m with no need for additional power. The connectors have gold plated contacts. HDMI 1.3 and HDCP compliant.

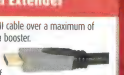

new

10m HDMI Lead with Extender	WQ-7403	$99.00
15m HDMI Lead with Extender	WQ-7408	$139.00
20m HDMI Lead with Extender	WQ-7409	$199.00

Brush Cable Entry Wall Plate

new

Single gang brush plate for cable entry through walls etc. Suitable for pre terminated cables going to LCD or plasma screens, and particularly suited to HDMI cables as they can't be split, spliced or field-terminated. An ideal solution if you only have a short cable run.

$9.95

PS-0291

CLEARANCE HDMI LEADS

High Quality HDMI Cables

Save $$$

They feature heavily plated 24K gold plated connectors and extra special oxygen-free heavy copper cabling. Each plug is solidly constructed for frequent, reliable use. Also featured are high quality moulded strain-relief cord grommets.

FROM $19.95

0.5m	WQ-7410	Was $34.95 **Now $19.95**	Save $15.00
1.5m	WQ-7400	Was $39.95 **Now $24.95**	Save $15.00
3.0m	WQ-7402	Was $49.95 **Now $29.95**	Save $20.00
5.0m	WQ-7404	Was $59.95 **Now $39.95**	Save $20.00
10.0m	WQ-7405	Was $89.95 **Now $59.95**	Save $30.00

Economy HDMI Leads

Save $$$

These HDMI leads are a cost-effective solution without compromising quality or performance. They all have gold plated connectors and are fully HDMI v1.3b and HDCP compliant.

FROM $14.95

1.5m	WQ-7415	Was $24.95 **Now $14.95**	Save $10.00
3m	WQ-7416	Was $34.95 **Now $19.95**	Save $15.00
5m	WQ-7417	Was $49.95 **Now $29.95**	Save $20.00

2 Channel Pro DJ Mixer

new

The ideal mixer to learn on. Two channels each with RCA inputs for CD or other line level source and a set of dedicated phono inputs. The BPM counter is capable of accurately measuring the beats per minute of almost any kind of dance music automatically and works equally well with a CD player or a turntable.

- Level meters on each channel
- 2 band EQ on each channel
- Phono and line level inputs
- Mic and headphone outputs
- Effects loop
- Line level preamp outputs
- Selectable CF curve
- Dimensions: 330(W) x 22(H) x 102(D)mm

$149.00

AM-4206

All Savings are based on Original RRP

Limited stock on sale items.

DON'T JUST SIT THERE, BUILD SOMETHING

TOOLS FOR YOUR TRADE

USB 3.0 ACCESSORIES

ExpressCard with 2 x USB 3.0 Ports

new

Achieve transfer speeds of up to 2.5Gbps with this ExpressCard to 2 x USB 3.0 port adaptor for your laptop. Though unable to reach the maximum theoretical speed of USB 3.0 (4.8Gbps) due to ExpressCard bandwidth limitations it is still more than triple the speed of USB 2.0. This is more than enough for a significant reduction in transfer times. Compatible with XP, Vista and 7 (32-bit and 64-bit)

XC-4141

$79.95

PCI-E USB 3.0 Interface Card

new

Slot this PCI-Express card into your motherboard for 2 x USB 3.0 ports and reach speeds of up to 4.8Gbps, ten times faster than USB 2.0. Transfer times on hard drives and other storage platforms that support USB 3.0 will be significantly quicker. A cost effective upgrade for your desktop PC that will give compatibility with next-generation USB products. Compatible with Windows XP, Vista, 7 (32-bit and 64-bit)

XC-4143

$69.95

USB 3.0 to 2.5/3.5" HDD/SSD SATA Adaptor

new

Collected a box full of hard drives over the years? Want a simple way to access them? This adaptor is the perfect tool. Older USB 2.0 SATA adaptors are unable to extract the full 3.0Gbps transfer speed of SATA drives. This adaptor will give you the speed you need to transfer large files in little to no time (your PC must have a USB 3.0 port). Compatible with Windows 2000/XP/Vista/Win 7/MAC OS 9.X/10.X/Linux

XC-4145

$79.95

USB 3.0 SATA 2.5"/3.5" HDD Dock

new

USB 3.0 boasts theoretical speeds of up to 4.8Gbps, that's ten times faster than its USB 2.0 predecessor. This dock is particularly useful for computer technicians, IT professionals and those of you who download a lot and need to swap between drives frequently.

Compatible with Windows XP/Vista/7/Mac 9.X & higher
Dimensions: 145(L) x 94(W) x 82(H)mm

XC-4696 Note: HDD not included.

$79.00

7" USB Plug and Play LCD Monitor

new

If you're in dire need of more screen real estate and don't want the hassle of a big bulky secondary monitor that needs it own power supply and display cable, this USB monitor is perfect. It's great if you're busy playing a game and still want access to your IM program like MSN or Skype. The screen has a nifty little rotatable stand and the display can be adjusted accordingly for portrait or landscape view.

$269.00

- Compatible with Windows 2000/XP/Vista/7
- Dimensions:188(L) x 114(W) 35(H)mm

QM-3748

2.4GHz Wi Fi Yagi Antenna

new

Ultra-compact unobtrusive indoor antenna for wireless networking at home or in a small office. Termination is by N connector on 1m lead.

- Frequency range: 2.4 -2.4835GHz
- VSWR: ~ 2.0
- Impedance: 50 ohm
- Gain: 8dBi
- Polarisation: Vertical
- Base: 85(L) x 47(W)mm

AR-3282

$29.95

Blue LED Wall Clock with Alarm & Remote

new

Eye-catching LED wall clock with brilliant bright blue numeric display. With easy-to-read numerals 2.5-inches tall, its fresh design will suit contemporary homes as well as modern offices, workshops, waiting rooms etc. Powered either by mains adaptor or 9V battery.

- 12/24 hour mode with alarm clock function
- Remote control included
- Mains adaptor included
- Dimensions: 310(W) x 33(D) x 164(H)mm

AR-1759

$69.95

Jaycar Cooler Bag

new

Take a few frosty ones to the cricket - or a bottle of chardonnay if you like to bowl from the Paddington end. Lined with insulation and holds a 6-pack.

- Size: 260(W) x 260(H) x 120(D)mm

HB-5005

$2.95

Ethernet over Power - 200Mbps

new

If you don't have the time for crimping cables and installing wallplates, Ethernet over the existing power cables is a great solution. The device will convert Ethernet packets from the Ethernet port to powerline communication packets (PLC packets), which run on regular home power lines, then converts them from PCL packets back to Ethernet packets. A simple way to extend speedy wired networking around the house.

- Supplied as a pair
- Data rate: Up to 200Mbps
- Data link protocol: HomePlug AV

YN-8350

$189.00

Wireless Colour Video Doorphone

A compact wireless video doorphone with handsfree call and talk function that's big on features. Digital encryption, code-hopping 2.4GHz wireless transmission up to 100m range. 3.5" TFT LCD and can store up to 200 images internally. It also has a built-in rechargeable battery so you can take the monitor anywhere around the house. The camera unit is very easy to install and equipped with a wide angle lens and IR illuminator. Paired with one of our electric door strikes (see below) and your door can be unlocked at a touch of a button.

- 2.4GHz wireless transmission
- Clear night vision
- Dimensions: 290(W) x 210(H) x 50(D)mm

QC-3253

new

$299.00

Also available: Electric Door Strikes:

STANDARD	- Fail Secure	LA-5078	$49.95
	- Fail Safe	LA-5081	$39.95
NARROW	- Fail Secure	LA-5077	$29.95
	- Fail Safe	LA-5079	$29.95

USB Powered Extension Lead with 4-Port Hub

new

Extend your printer or any other USB device as far as 10 metres away from your PC. A 4-port hub adds extra flexibility. Powered by USB from the host computer.

XC-4122

$49.95

Limited stock on sale items.
All Savings are based on Original RRP

Jaycar Electronics
Better, More Technical

WINTER PROJECTS

HID Dual Lamp Conversion Kits - 35 Watt

Used in the latest model luxury and high performance cars, High Intensity Discharge (HID) vehicle headlights are far brighter, whiter and more efficient than their quartz halogen predecessors.

35W HID Xenon Lamps - H4 base

- 6000K colour temperature comparable to sunlight
- Extra bright 3200 lumens
- Includes 2 bulbs/ballast

FROM **$99.00**

Available in two easy-installation models:

Low Beam	SI:3416 $99.00
High/Low Beam	SI:3417 $149.00

Warning: State Road and Traffic Authorities do not allow retro-fitting of these products to cars with ordinary headlights even though these kits do not require any changes to factory wiring.

HID Conversion Kits - 35 Watt

These are basically intended to convert a spotlight on, say a large boat, to a much more powerful and effective spotlight. These kits includes one 35W Xenon HID lamp, 6000+K, with either a H1, H3 or H4 base, ballast unit and wiring harness. They are very simple to install. Light output approximately 3000 lumens at 12V.

Three kits available:

H1 SI:3367 $69.95
H3 SI:3365 $69.95
H4 SI:3368 $69.95

$69.95 Each

Digital Luggage Scale

NEW

Don't ruin your holiday being slugged with exorbitant excess baggage charges. Pack one of these on your next trip and avoid nasty surprises at the check-in counter.

- Requires 2 x AAA batteries
- Capacity: 40kg
- Tare and auto-off
- Backlit LCD
- Overload and low battery indication
- Size: 122(L) x 85(H) x 25(W)mm

QM-7232

$19.95

Multifunction Radio Alarm Clock

NEW

Project the time and outdoor temperature on your ceiling and it has six realistic nature sounds that create a true-to-life outdoor ambience to slowly lull you to sleep at night or peacefully awaken you in the morning. AM/FM radio, dual alarms with snooze function, and blue backlit LCD with low/high settings.

- 6V mains adaptor and outdoor temperature sensor included
- Requires 2 x AAA batteries
- Size: 160(W) x 180(H) x 42(D)mm

AR-1755

$49.95

Micro Blade Fuses 10pk

NEW

Micro-blade fuses to suit newer model cars. The pack contains one each of 5, 7.5, 25, 30A and two each of 10, 15, 20A.

SF-2146

$9.95

2Robot Chess Board

Program, it can teach you to play as well as improve your skills.

- Suitable for novice to experienced players
- 128 levels including training, tournament & problem solving levels up to mate-in-6 moves
- Programmed in accordance with the International Chess Rules
- Board size: 380(W) x 380(D) x 40(H)mm

GT-3516
WAS $299.00

$249.00
SAVE $50.00

Wind Generators - Clearance SALE!

Always at the forefront of alternative energy technology, we're pleased to offer this range of wind turbine generators. As well as the 200W model we now have a super-compact 300W version, and a big 500W unit for those who want to generate some serious power.

NOTE: All wind generator models are supplied without mounting tower and associated mounting hardware.

12VDC - 200W
No of Blades: 3
Included: generator, blades, tail, hub, nose cone, charge controller
MG-4520 Was $399.00 **Now $349.00** Save $50.00

300W 12VDC MG-4530 Was $599.00 **Now $499.00** Save $100.00
300W 24VDC MG-4532 Was $599.00 **Now $499.00** Save $100.00
No of Blades: 3
Included: generator, blades, tail, hub, nose cone

500W - 24V
No of Blades: 3
Included: generator, blades, tail, hub, nose cone, charge controller
MG-4540 Was $999.00 **Now $799.00** Save $200.00

Warning: Above wind generators are suitable for permanent, terrestrial installations ONLY.

From $349.00

Spare parts available, see our catalogue or website.

Massive Savings Save up to 20% off!

Colour Coded Key Finder

NEW

Remember putting your keys down but cant quite pinpoint where? This little gadget will help you with your problem in no time. Simply press the colour coded button allocated to your keys on the main unit and the matching receiver will beep so you can find those missing keys. The base unit can be placed on a counter top or be wall mounted. Stand included.

- Transmits radio signal up to 25m away
- Key fobs incorporate LED flashlight
- Required 3 x AA Batteries

XC-0353

$49.95

YOUR LOCAL JAYCAR STORE

Australia Freecall Orders: Ph 1800 022 888

AUSTRALIAN CAPITAL TERRITORY

Belconnen	Ph (02) 6253 5700
Fyshwick	Ph (02) 6239 1801

NEW SOUTH WALES

Albury	Ph (02) 6021 6788
Alexandria	Ph (02) 9699 4699
Bankstown	Ph (02) 9709 2822
Blacktown	Ph (02) 9678 9669
Bondi Junction	Ph (02) 9369 3899
Brookvale	Ph (02) 9905 4130
Campbelltown	Ph (02) 4620 7155
Coffs Harbour	Ph (02) 6651 5238
Croydon	Ph (02) 9799 0402
Erina	Ph (02) 4365 3433
Gore Hill	Ph (02) 9439 4799
Hornsby	Ph (02) 9476 6221
Liverpool	Ph (02) 9821 3100
Maitland	Ph (02) 4934 4911
Newcastle	Ph (02) 4965 3799
Penrith	Ph (02) 4721 8337
Rydalmere	Ph (02) 8832 3120
Sydney City	Ph (02) 9267 1614
Taren Point	Ph (02) 9531 7033
Tweed Heads	Ph (07) 5524 6566
Wollongong	Ph (02) 4226 7089

NORTHERN TERRITORY

Darwin	Ph (08) 8948 4043

QUEENSLAND

Aspley	Ph (07) 3863 0099
Caboolture	Ph (07) 5432 7152
Cairns	Ph (07) 4041 6747
Capalaba	Ph (07) 3245 2014
Ipswich	Ph (07) 3282 5800
Labrador	Ph (07) 5537 4295
Mackay	Ph (07) 4953 0611
Maroochydore	Ph (07) 5479 3511
Mermaid Beach	Ph (07) 5526 6722
Nth Rockhampton	Ph (07) 4926 4155
Townsville	Ph (07) 4772 5022
Underwood	Ph (07) 3841 4888
Woolloongabba	Ph (07) 3393 0777

SOUTH AUSTRALIA

Adelaide	Ph (08) 8231 7355
Clovelly Park	Ph (08) 8276 6901
Gepps Cross	Ph (08) 8262 3200

TASMANIA

Hobart	Ph (03) 6272 9955
Launceston	Ph (03) 6334 2777

VICTORIA

Cheltenham	Ph (03) 9585 5011
Coburg	Ph (03) 9384 1811
Frankston	Ph (03) 9781 4100
Geelong	Ph (03) 5221 5800
Hallam	Ph (03) 9796 4577
Melbourne	Ph (03) 9663 2030
Ringwood	Ph (03) 9870 9053
Shepparton	Ph (03) 5822 4637
Springvale	Ph (03) 9547 1022
Sunshine	Ph (03) 9310 8066
Thomastown	Ph (03) 9465 3333
Werribee	Ph (03) 9741 8951

WESTERN AUSTRALIA

Maddington	Ph (08) 9493 4300
Midland	Ph (08) 9250 8200
Northbridge	Ph (08) 9328 8252
Rockingham	Ph (08) 9592 8000

NEW ZEALAND

Christchurch	Ph (03) 379 1662
Dunedin	Ph (03) 471 7934
Glenfield	Ph (09) 444 4628
Hamilton	Ph (07) 846 0177
Hastings	Ph (06) 876 0239
Manukau	Ph (09) 263 6241
Mt Wellington	Ph (09) 258 5207
Newmarket	Ph (09) 377 6421
Palmerston Nth	Ph (06) 353 8246
Wellington	Ph (04) 801 9005

NZ Freecall Orders Ph 0800 452 922

Arrival dates of new products in this flyer were confirmed at the time of print. Occasionally these dates change unexpectedly. Please ring your local store to check stock details. Prices valid to 23rd July 2010. All savings are based on original RRP

Head Office
320 Victoria Road, Rydalmere NSW 2116
Ph: (02) 8832 3100 Fax: (02) 8832 3169

Online Orders
Website: www.jaycar.com.au
Email: techstore@jaycar.com.au

Jaycar electronics
Better. More Technical

PRODUCT SHOWCASE

Tenrod's Fluoro Replacement LED Tube

In the "Slash your lighting bill" feature in the May issue, we mentioned LED replacements for fluoro tubes. In that we said "they are extremely expensive . . . in the next few years that is bound to change." Prophetic words indeed, even if our timing was out by . . . a few years!

Shortly after the May issue went on sale, Tenrod contacted us with details of their new, high efficiency, energy saving, environmentally-friendly LED fluoro replacements.

While still significantly more expensive than fluoro tubes, Tenrod's T8 (ie one inch) LED Tube offers half the nominal power consumption of fluorescent lamps and, with the absence of troublesome starters, easily justifies replacement of fluoros on energy costs savings costs alone – and with a much longer life of 50,000 hours.

Each "tube" has 252 LEDs but instead of glass, which is easily broken, the LEDs are housed in a highly durable polycarbonate and aluminium casing.

Installation or replacement of the fluorescent tube is so simple: remove the starter (and electronic ballast if fitted with one). Install the LED Tube in its place (it fits standard tombstones) and switch it on. (An iron core ballast can be left connected or removed as the LED tube is basically unaffected by it).

Tenrod's T8 replacement LED Tubes come in four white colours to suit all purposes – warm, cool, full spectrum and daylight. They are all C-Tick approved for Australia & New Zealand.

The solid-state technology and absence of starters do away with the failures of fluorescent lamps from frequent on-off switching. They are excellent choices for heavy duty and long hours usage areas like factories, car parks (rogue car radio antennas won't smash them!) and offices etc, in new or retrofit installations.

Contact:
Tenrod Australia Pty Ltd
1/24 Vore St Silverwater NSW 2128
Tel: (02) 9748 0655 **Fax:** (02) 9748 0258
Web: www.tenrod.com.au

Emona Instruments has moved – but not far!

The Emona Instruments Sydney Head Office has relocated to larger, newly refurbished, premises to support growing import, export and manufacturing business.

The new address, 78 Parramatta Rd, Camperdown NSW 2050 is four doors from the old location at 86 Parramatta Rd.

Postal address, telephone and fax numbers remain unchanged.

Differential Temperature Controller

The N321S from Novus is a low-cost controller intended for solar water heating applications. It controls the water circulation system based on the difference of temperature between the solar collector and the storage tank (or swimming pool).

The instrument comes with two NTC-type temperature sensors and a control output for activating the water circulation pump. It provides protection against overheating and freezing to the piping, preventing damage to the system. Temperature Resolution is 0.1° from –19.9 to 119.9°

Modbus communications is optional for monitoring and controlling multiple controllers on a RS485 line. Price is from $89.00+GST

Contact:
Ocean Controls
PO Box 2191, Seaford Busn Centre, Vic 3198
Tel: (03) 9782 5882 **Fax:** (03) 9782 5517
Website: www.oceancontrols.com.au

Front Panel Designer: free software update

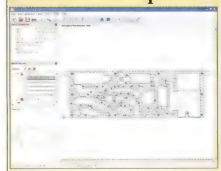

Whether you design panels and enclosures for a huge conglomerate or one-offs for your own hobbyist needs, you can get highly professional, cost-effective products from Front Panel Express, a leading international manufacturer of custom-designed front panels and enclosures.

Now they have made life even easier, with the release of a new version of their free design software, Front Panel Designer.

The design software Front Panel Designer is a tool for engineers, designers, and do-it-yourselfers to design their front panels or enclosures. It is a WYSIWYG (What You See Is What You Get) application – the user gets the results as they see it on their screen.

This update can now run on Windows, Mac OS X, and Linux, has more design flexibility and additional features. Additionally, the company has reduced their standard manufacturing lead time from 7 to 5 days.

Front Panel Express has an automated process to machine these designs with modern CNC technology on aluminum panels, plastic panels, or on customer provided material.

This process makes it easy for their customers to quickly get professionally finished products for their prototype or production runs.

Contact:
Front Panel Express LLC
5959 Corson Avenue South, Suite 1,
Seattle, WA 98108 USA
Tel: +206 768 0602 **Fax:** +206 768 0679
Website: www.frontpanelexpress.com

By Jeff Monegal

PICAXE Project Development System

With the abundance of microprocessor/microcontroller variations available these days it is no small wonder that many of the designs produced by electronic enthusiasts use one type or another of these components. And most commercial equipment these days has a micro controlling it. But how do you get from an idea to a working design?

When designing microcontroller-based circuits, one of the tools available is a project development unit. This allows the software and hardware parts of the design to be tested in a real time environment but without the high cost of designing and building actual prototype systems.

Changes to both the software and hardware can easily be implemented without the need to produce a new prototype every time a change is required.

Development systems are available for most microprocessor/microcontroller systems. The development system described here has been squarely aimed at one of the more popular micros available today: the PICAXE range.

Very few people involved in the electronics industry – and especially SILICON CHIP readers – would not have heard of the PICAXE. There are now many different versions of the PICAXE, ranging in capabilities from 8-pin chips with limited memory space right up to powerful 40-pin fire-breathers!

And this month a brand new PICAXE chip, the 18M2 goes on sale, offering sensational performance and features (see SILICON CHIP June 2010 issue, page 44).

The development system described here will allow hardware/software debugging for over 90% of the chips in the PICAXE range.

As clever as micros are these days, they all suffer from one problem:

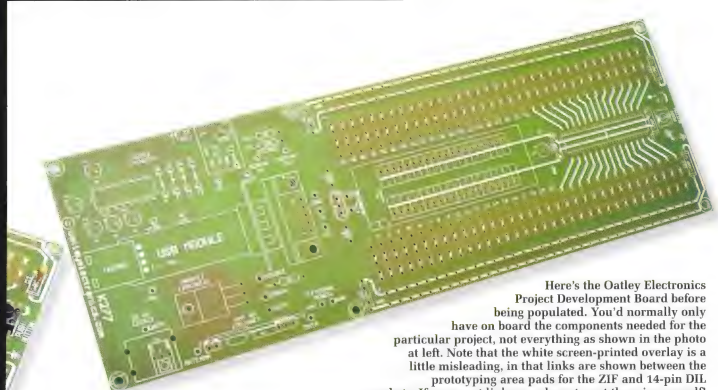

Here's the Oatley Electronics Project Development Board before being populated. You'd normally only have on board the components needed for the particular project, not everything as shown in the photo at left. Note that the white screen-printed overlay is a little misleading, in that links are shown between the prototyping area pads for the ZIF and 14-pin DIL sockets. If you want links, you have to put them in yourself!

they will always do exactly what you tell themto do. Unfortunately that is, especially in the early days of development, not exactly what you want it to do.

There would not be a programmer in the world who has never needed to debug the software they have written.

(Debugging is a term we use to describe the process of developing the software to allow completely problem-free operation ie, getting rid of the "bugs".)

With this system you can assemble the hardware part of the design on a breadboard using the on-board IC sockets and then, using flying wires, connect the other components in the design to the chip.

Both ZIF ("zero insertion force") and normal DIL (dual in-line) IC sockets are provided. The big advantage of the ZIF socket is that it can not only handle various sizes (ie, number of pins) of micros but they can be inserted and removed at will; easier than prising them out of DIL sockets.

External breadboards can also be used to complement this system when developing larger designs.

Once the hardware part of the system has been set up, the software can be downloaded and then system performance can be debugged.

The latest version of the free development software from Revolution Education allows connection via a USB port on the host PC. Because of this we have included a USB to RS232 converter. This allows much faster program uploading to the PICAXE chip.

Note that this article is not meant to be a tutorial on the PICAXE system. More detailed information on the range and capabilities of the various PICAXE chips available is freely available on the internet and from the PICAXE suppliers themselves. Many also offer downloadable software, either saving you the trouble of writing and debugging your code or at least giving you a great springboard for developing your own software.

There is a large amount of infor-

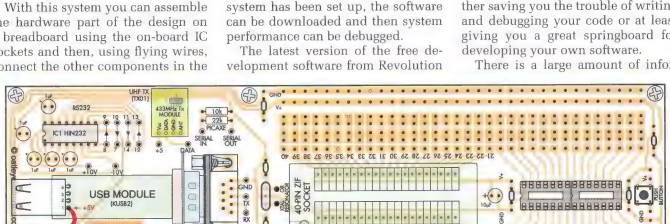

Fig.1: the Project Development Board populated with everything possible, as shown in the photo above left. The RS232 interface is top left; alongside it is the 433MHz data transmit module. Centre left is the USB conversion module and immediately below that a power MOSFET. At the bottom are the infrared receiver and the UHF data receive modules.

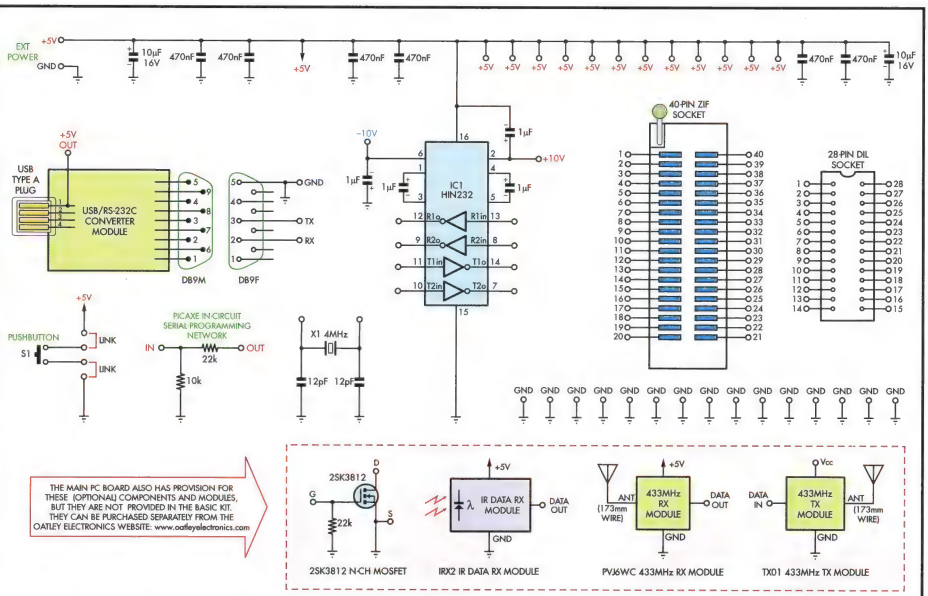

SC 12010 PICAXE USB DEVELOPMENT & PROGRAMMING KIT

Fig.2: it's not so much what is on the PC board as what YOU can put on it for your project development. In its basic form, it has provision for a USB and RS232C interface (which also gives ± supply rails), a power MOSFET, an infrared data receiver module along with both receive and transmit UHF (433MHz) data modules.

mation available on the Revolution Education (UK) web site, www.rev-ed.co.uk/picaxe/.

What next?

The development board is intended as a platform for PICAXE ideas. With its variety of component pads and connections, it has enormous flexibility. And as we mentioned earlier, if there's not enough space on this board, connect it to a protoboard or similar.

Looking at this photographs and diagrams of this system we can see that on the left side a variety of on-board support and add-on components has been included.

There are specific positions for UHF TX/RX (transmit/receive) modules, along with an infrared receiver, a high current MOSFET and an RS232 interface chip. Some provision is also made for the common components (eg, resistors, capacitors etc) associated with these modules and chips.

The RS232 chip is included mainly as a cheap way of producing the positive and negative supply rails used in most opamp circuits.

Of course the two inputs/outputs associated with the RS232 chip are also available for use as you require them.

The right side of the board is your "playground" – apart from the ZIF socket and 28-pin DIL socket (actually two 14-pin end-to-end) in the centre of the board, the rest is left for your project development.

Each of the pins on the ZIF and DIL sockets are brought out to accessible pads, ready for you to wire as required. Of course, if you don't need to connect to a particular IC pin, you don't have to.

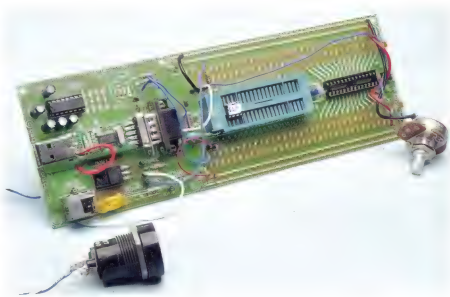

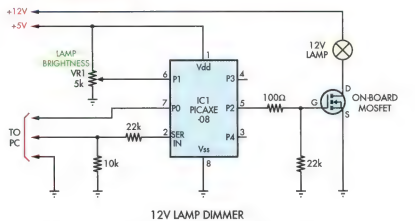

Fig.3: here's the first project idea, a PICAXE-controlled 12V lamp dimmer using the on-board MOSFET. The photo above shows it in completed form. Here it's the tiny PICAXE 08 being used. Almost looks lost in the ZIF socket, doesn't it!

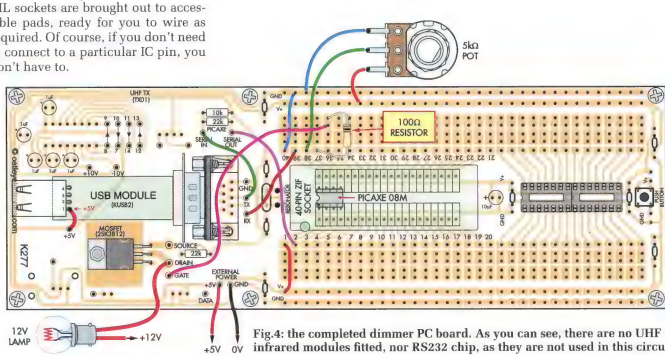

Fig.4: the completed dimmer PC board. As you can see, there are no UHF or infrared modules fitted, nor RS232 chip, as they are not used in this circuit.

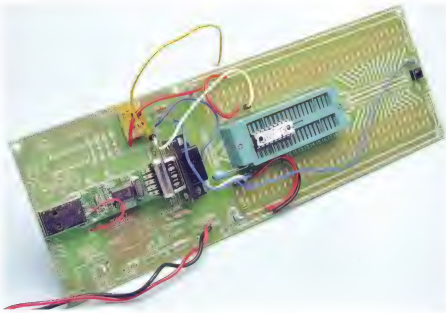

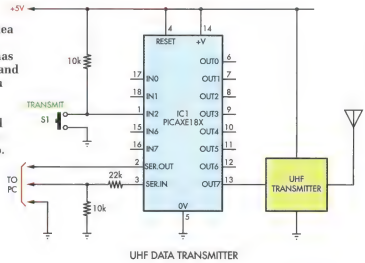

UHF DATA TRANSMITTER

Fig.5: project idea 2, a UHF data transmitter. It has a PICAXE 18X and a tiny UHF data transmitter module (the lighter coloured PC board at the top of the photo. Fig.6 (below) similarly shows the populated PC board.

In use

The PC board is intended to be very flexible. You simply select the features and add-ons required then connect them all together using wires soldered to the pads provided.

To start the development of a particular project the operator begins with a circuit diagram. From here, the various connections to and from the chip are made using flying wires. On-board multiple pads are included, which allow various components to be connected to the chip.

And as mentioned before, you can always connect more external breadboards if needed.

The power supply inputs are wired to the appropriate pins as well as the 2 programming inputs. To connect the PICAXE chip to the host PC, two resistors are necessary. These two resistors are included on-board but must be wired to the correct pins.

Some variations of PICAXE chip need an external oscillator and some do not, so a 4MHz crystal is included on-board, just in case. It too must be wired to the correct pins (if in fact required). Finally a reset push button is included.

There is no one way that will be best when using this system, so the way components are connected to the micros will vary considerably. The best way we found is to consider this development unit as a breadboard that has a ZIF socket installed.

When the hardware side of the project is finished and tested the fun part can commence. That is the software development part of the project. This is where the idea of a software development system comes into its own.

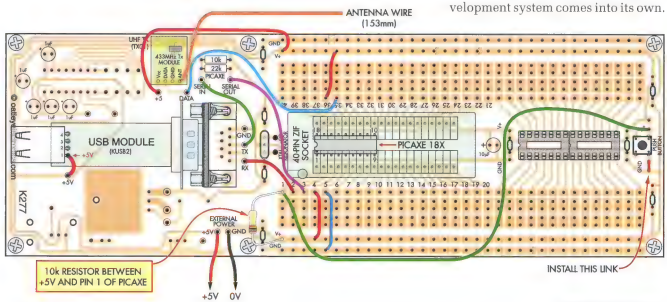

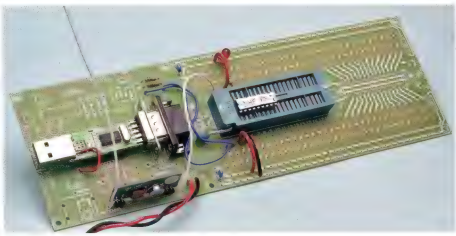

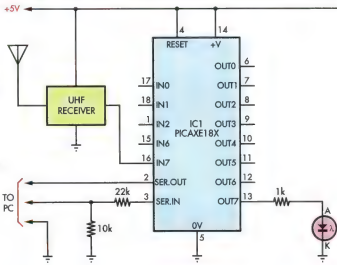

Fig.7: project idea 3, a matching UHF data receiver. It also uses a PICAXE 18X and of course the UHF data receiver module is fitted. Fig.8 (below) shows the populated PC board for this project.

Parts List – PICAXE Development Board

1 PC Board, 231 x 77mm, coded K277
1 40-pin ZIF socket
2 14-pin DIL IC sockets
1 DB9 right angle female connector, PCB mounting
1 DB9 solder tail male connector
1 KUSB2 USB-to-serial module
1 USB cable
1 tactile push button switch
1 RS232 Tx/Rx IC (eg, HIN232CP)
1 4MHz crystal

Capacitors
1 10µF 16V electrolytic
5 1µF 16V electrolytic
6 470nF monolithic
2 12pF ceramic

Resistors (0.25W 1%)
1 10k 1 22k
(required for programming)

Optional items
(depending on your application)
1 2SK3812 N channel MOSFET
1 TX01 433MHz transmit module
1 PVJ6WC 433MHz receiver module
1 IRX2 infrared receiver module
Short (173mm) lengths of hookup wire for 433MHz antennas
Lengths of hookup wire to make connections on board

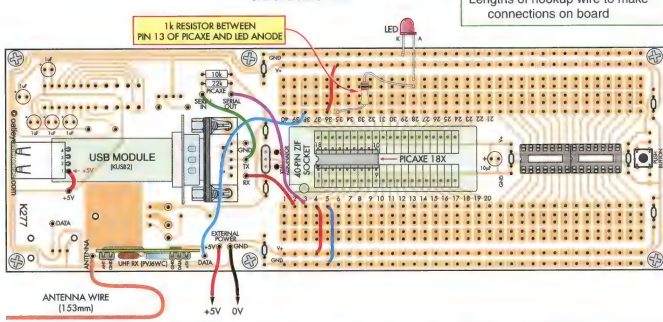

Writing software is fraught with pitfalls. Using this system the performance of software can be analysed in a real-time environment.

When changes to remove software bugs or improve performance are needed, it becomes a simple matter to make these changes on the PC and then upload them to the PICAXE chip. You do not have to build a new prototype or waste components. The savings in real dollar terms mean the development system pays for itself in a very short time.

Some useful examples of software will be available on the Oatley Electronics web site. These examples are not meant to be complete programs

but they can be used to get ideas on how to achieve certain functions using this system.

For example, one of the sample programs allows the sending and receiving of multiple bytes of data using a UHF radio link. Another will allow the user to decode the IR signal from a standard TV remote control unit.

The PICAXE language allows the signals from an IR signal using the SIRC (Serial Infra-Red Control) protocol to be decoded. This is a popular protocol and chances are that you will have a hand-held remote control that uses it.

Other examples of code will allow the on board MOSFET to drive a 12V lamp with full dimming capabilities (PWM). All these examples can be used as is or as a source of tips and ideas for the user. The limit of projects that can be developed using this system is virtually endless.

As time goes by, more and more PICAXE code examples will be posted on the Oatley Electronics web site – but search them out on the internet as well.

There are many out there and the chances are one of them may do what you want, or is close enough to allow some modification of the code to do so.

Project assembly

Putting the unit together is simplicity in itself. The component overlay is printed on the PC board and there are not too many components to be soldered in.

Just make sure you follow the overlay, particularly where it comes to polarised devices: when they're put in back to front, the smoke usually gets out and without that all-important smoke, they don't work real well!

Depending on what you want to use your Development Board for, you can leave some components out – for example, if you're not going to use it for power control, there's no need to include the MOSFET.

Similarly, if you're not likely to want either infrared data or the UHF (433MHz) data transmitting or receiving, there's no point in putting these components in.

However, there are quite a few minor components which, because of their low cost, can be placed on the PC board "just in case" you ever need them. These include the various resistors, capacitors, even the push-button switch and crystal, etc.

Similarly, it's probably a good idea to place the RS232 chip because it gives you a ±10V power supply – again, just in case you ever need it.

Once assembly is complete you should give the unit a good check-over, looking for bad solder joints, missed solder joints, wrongly placed components and any other problems that may have found their way in.

And that's just about it: now all you have to do is design your circuit and write the code to suit. Or, as we said before, find suitable code (eg on the 'net) and modify or cut it as appropriate.

Even if you make a mistake, it's easy to add or remove components on this PC board to do what you want! SC

© Oatley Electronics. The kit price of $30.00 includes all items listed in the parts list except those labelled as "optional items". (Kit cat no K2777)
Kits can be ordered via the Oatley Electronics website, www.oatleyelectronics.com.au, or by 'phone on (02) 9584 3563. Sample software code for these three projects can be downloaded from the above website free of charge.

Custom Battery Packs, Power Electronics & Chargers

For more information, contact
SIOMAR BATTERY ENGINEERING
Phone (08) 9302 5444 or email mark@siomar.com
www.batterybook.com

By JIM ROWE

Lab-standard 16-Bit Digital Potentiometer

No, this is not some kind of fancy digital volume control for hifi systems. Instead, it's a low-cost digital programmable voltage divider. It's used to provide an accurate adjustable output from a precision voltage reference for meter calibration and other tasks.

LET'S SAY you've built the Precision DC Voltage Reference described in the May 2009 issue of SILICON CHIP. This provides an accurate 10.000V DC voltage source which is fine for calibrating the higher voltage ranges of a DMM or other meter. But how can you use it for calibrating the lower ranges? That's where you need to use a voltage divider, to break down the 10.000V to a suitable lower level – like 4.999V, 1.999V or even 199.9mV.

In principle, a voltage divider is very straightforward but in this situation there's a special requirement: the divider's division ratio should be programmable with a high degree of accuracy, if the accuracy of its output is not to be degraded significantly from that of the 10.000V reference.

So that's the idea behind this new Digital Potentiometer; it's designed to provide a voltage divider with an accurately programmable division ratio over a 10,000:1 range. It will allow you to take the 10.000V reference and derive any lower voltage you wish – from 0.001V (1mV) up to 9.999V – with a resolution of 1mV and an absolute accuracy of ±0.2mV up to 200mV, ±0.5mV up to 1.000V and ±1mV up to 9.999V.

These figures translate to a relative accuracy of ±0.4% at 10mV, ±0.02% at 100mV, ±0.05% at 1V and ±0.01% at 9.9V. This order of accuracy should be quite suitable for calibrating the majority of handheld DMMs and similar instruments.

By the way, because the potentiometer itself uses purely resistive elements, it can be used as an accurate

Parts List

1 PC board, code 04107101, 184 x 99.5mm
1 UB2 jiffy box, 197 x 113 x 63mm
1 16 x 2 LCD module, Altronics Z-7013 or similar (with LED backlighting)
1 16-key (4 x 4) keypad
16 SPDT mini DIL relay, 6V coil
1 SPDT mini toggle switch (S1)
1 4MHz crystal (X1)
1 2.5mm concentric power connector, PC board mtg (CON1)
1 40-pin 0.6-inch DIL IC socket
1 16-way SIL socket strip
1 16-way SIL pin strip
1 8-way SIL socket strip
1 8-way SIL pin strip (long)
4 M3 x 25mm tapped spacers
2 M3 x 15mm tapped Nylon spacers
13 M3 x 6mm screws, pan head
1 M3 nut
4 No.5 x 8mm self-tapping screws
3 binding post/banana jacks, red
3 binding post/banana jacks, black
1 400mm length of tinned copper wire, 0.7mm diameter
1 10kΩ mini horizontal trimpot (VR1)

Semiconductors

1 PIC16F877A-I/P microcontroller programmed with 0410710A.hex
1 LM7805 +5V regulator (REG1)
16 PN100 NPN transistors (Q1-Q16)
17 1N4004 1A diodes (D1-D17)

Capacitors

1 470µF 16V RB electrolytic
1 220µF 16V RB electrolytic
2 100nF monolithic
1 100nF MKT metallised polyester
2 27pF disc ceramic

Resistors (0.25W, 1%)

4 10kΩ	1 2.2kΩ
1 8.2kΩ	16 47Ω
16 4.7kΩ	1 22Ω

Precision Resistors

17 3.000kΩ 0.1% metal film (Farnell 1634061)
15 1.500kΩ 0.1% metal film (Farnell 9500901 or 1751462; RS 165-933)

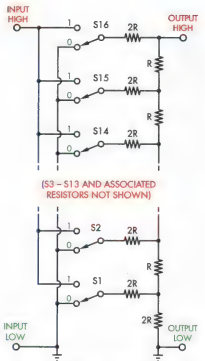

Fig.1: the basic form of the 16-step R/2R ladder network (switches S3-S13 omitted for clarity).

divider for low-frequency AC (eg, below 20kHz) as well as DC.

How it works

In order to achieve this level of accuracy and to make the Digital Potentiometer easily programmable, we have adopted the same "binary switched resistive ladder" configuration used in many linear DACs (digital-to-analog converters). We have used a 16-step ladder because this allows the division ratio to be adjusted in 65,536 discrete steps. That's because 2^{16} = 65,536, meaning that 16 binary switches have the potential for 65,536 different combinations (0-65,535 inclusive).

The basic form of the 16-step ladder is shown in Fig.1, although only five of the 16 switches are shown, ie, the two lowest switches S1 & S2 and the three uppermost switches S14-S16. The intermediate switches S3-S13 have been omitted for clarity.

This configuration may not look like a conventional voltage divider but it does the same job and has the advantage that the binary "weighting" of each switch increases by a factor of two, as you move up from S1 to S2, S2 to S3 and so on up to S16. So the divider's output (as a proportion of the input) can be programmed very simply in binary fashion.

S1 has a binary weighting of 1, S2 a weighting of 2, S3 a weighting of 4 and so on all the way up to S16, which has a weighting of 32,768. If we connect this 16-step divider to an input voltage of 10.000V, it is therefore capable of providing an output voltage adjustable in steps of 0.15259mV (10,000/65,535) from 0V to 10.000V, simply by setting switches S1-S16 to the correct binary combination.

So the simple switched resistive ladder arrangement of Fig.1 is quite capable of being used as a precision voltage divider as it stands. But in this simple binary form it would be difficult to program; you'd have to work out the binary number corresponding to the particular output voltage you wanted, in order to set the 16 switches.

Instead, we have used a microcontroller to drive a set of 16 SPDT relays in place of the switches, as shown in the block diagram of Fig.2. This allows you to simply key in the output voltage you want (in decimal) via a keypad, with an LCD readout to show you what you're doing. The micro calculates the correct binary number to program the divider's 16 relays to achieve this output voltage – or as close as it can get.

Resolution & accuracy

Before we look at the full circuit of the Digital Potentiometer, we should clarify a few points regarding its accuracy. There are two main factors which determine the unit's accuracy: (1) the resolution of the binary ladder as a whole by virtue of its having 16 steps and (2) the accuracy of the binary weighting of each of those individual steps as a function of the tolerance of the "R" and "2R" resistors in the ladder.

As mentioned, the basic resolution of a 16-bit binary divider is 1/65,535, so in this situation where it is dividing down from an input voltage of 10.000V, the resolution becomes 0.15259mV per binary step. This means that even if all the resistors in the ladder network have values of exactly R and 2R as required, we will only be able to program any particular output voltage to an accuracy of ±0.076295mV (ie, 0.15259/2).

Let's say that we want to program the divider for an output voltage of 0.001V or 1mV. If we do the maths, 1.000/0.15259 = 6.5535. Since we can

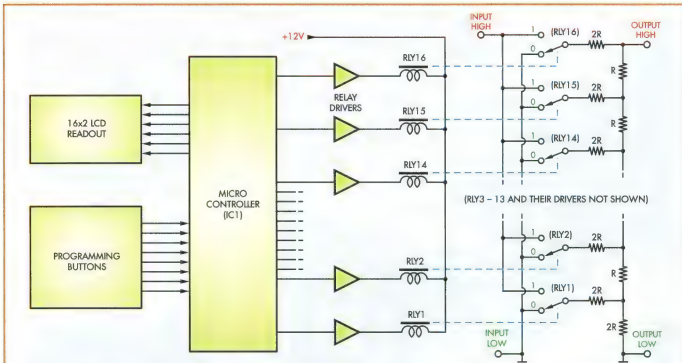

Fig.2: block diagram of the 16-Bit Digital Potentiometer. The desired output voltage is entered via a keypad and the microcontroller calculates the correct binary number to drive the 16 relays in the R/2R ladder network.

only program the divider in binary integers, this means that we can only program it for the binary equivalent of either 6 or 7. So our actual output voltage will be either 0.91554mV (6 x 0.15259) or 1.068mV (7 x 0.152159).

This "resolution error" varies depending on the output voltage setting. For example, if you want to program the divider for a voltage of 3.052V, the binary equivalent of 20,001 will give an actual output voltage of 3.05195V – only 0.05mV low.

On the other hand, if you want an output voltage of 1.000V, the binary equivalent of 6553 will give an output voltage of 999.92mV (0.08mV low) while the equivalent of 6554 will give an output voltage of 1000.075mV (0.075mV high).

So the actual size and polarity of the divider's resolution error does vary but should always be within the range of ±0.0763mV. We could only get a lower figure for this error factor by using additional binary divider steps (it will halve for each additional step).

As you can see though, the errors caused by the divider's 16-bit resolution are really not all that great. In terms of relative error, even a 1mV output voltage will only be either high or low by about 7% – and this relative error drops rapidly as the output voltage rises. The relative error for a 50mV output voltage is only +0.099%, while that for a 100mV output voltage is -0.053%.

In practical terms, the second error factor is more serious, because the operation of this type of binary switched voltage divider does depend on the resistors in each divider step having an exact 2:1 ratio (except for the very bottom step, which must have an exact 2:2 ratio, as shown). This means that this source of error will be zero only with "perfect" exact-value resistors in all steps. However, with "real world" resistors, the errors tend to rise significantly, because they accumulate as you move up the ladder.

What does this mean in practice? Well, in our first prototype, we used

Main Features & Specifications

Features

- A lab-type voltage divider, suitable for dividing down the output of a voltage reference to an accurately known lower voltage. It can be used for either DC or AC.
- Desired output voltage is programmed directly in decimal via a keypad, with an LCD readout. The divider output can be disabled or re-enabled at any time, simply by pressing an "Output Toggle" key.

Specifications

Output resolution: input voltage/65,535 or 0.15259mV steps when V_{in} = 10.000V.

Typical absolute accuracy: see plot in Fig.3. Better than ±1mV over full range, better than ±0.2mV up to 250mV output (Vin = 10.000V).

Input resistance: 813Ω minimum

Output resistance: 1.5kΩ (note: do not connect to a load of less than 1.5MΩ in order to obtain the specified accuracy)

Power drain: approximately 4.5W maximum (50-360mA from an external 12V DC supply)

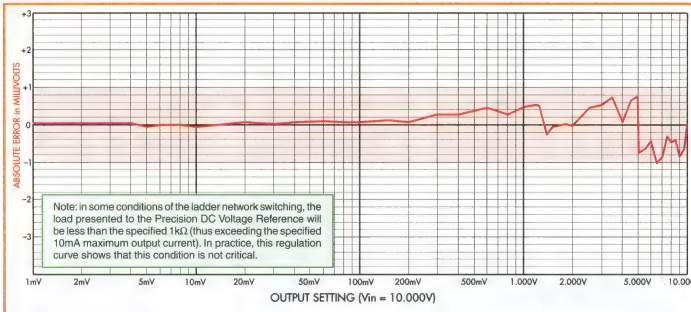

Fig.3: this graph plots the absolute error as a function of the output voltage. The absolute error is better than ±0.2mV up to 250mV output, ±0.5mV up to 1V output and ±1mV from 1V up to 10V output.

standard close-tolerance 1% metal film resistors (3.0kΩ and 1.5kΩ) in the ladder, to see what sort of accuracy this would result in (1% resistor values meant that the 2:1 ratio in each of the upper steps, together with the 1:1 ratio for the lowest step, would be only accurate to within ±2%).

However, when we measured the performance of this version, the accuracy was quite poor – particularly for output voltages above 200mV. In fact, the absolute error rose to +1mV at 300mV output, then to +2mV at 1V output, +5mV at 2.500V output, -2.5mV at 2.600V output and 5.1V output, +2.4mV at 7.6V output and -5.5mV at 7.8V output. Not good! Clearly the cumulative effect of the resistor tolerance error was wreaking havoc at the higher outputs.

In view of this poor result, we realised that in order to get acceptable performance, it would be necessary to use ladder resistors with significantly closer tolerance than 1%.

The resistors we finally settled on were of 0.1% tolerance, which resulted in the absolute error curve shown in Fig.3. This shows that the absolute error is better than ±0.2mV up to 250mV output, ±0.5mV up to 1V output and ±1mV from 1V up to 10V output.

To get any better accuracy than this, you would need to use ladder resistors with closer tolerance again or else go through the laborious work of selecting a set of 0.1% resistors with closer tolerance from a large stock. That assumes that you have a least one resistor of much higher tolerance to use as your standard.

By the way, even 0.1% tolerance resistors can pose a problem because although the value of 1.500kΩ is available in this tolerance, 3.000kΩ resistors are harder to find. As a result, you may have to use 3.010kΩ resistors, padding each one down to 3.000kΩ (±0.1%) by connecting a 910kΩ 1% resistor in parallel with it.

We should also warn you that 0.1% tolerance metal film resistors are much more expensive than the standard 1% tolerance types: just over $1.00 each, compared to about 6 cents each. So you'll end up paying about $37.00 for the 32 resistors used in the Digital Potentiometer's ladder network.

Circuit description

Now let's look at the full circuit of the Digital Potentiometer – see Fig.4. It's not very different from the block diagram of Fig.2 – we've just added the fine details.

The ladder divider is at upper right, with the binary switching done by relays RLY1-RLY16 as before. The relays are mini DIL types and they're all operated from a +11.4V supply rail, with a 47Ω resistor in series with each one to limit the coil current.

Transistors Q1-Q16 are the relay drivers, while diodes D1-D16 are there to protect the transistors from back-EMF damage when each relay is turned off.

Each relay driver transistor is controlled by one of the RB0-7 or RD0-7 port outputs of microcontroller IC1 (PIC16F877A-I/P). The 4.7kΩ base series resistors minimise the loading on the IC's port output lines, while still ensuring that driver transistors Q1-Q16 are switched on and off reliably.

The rest of the circuit is straightforward and is involved mainly with IC1 scanning the 4 x 4 input keypad (at lower left) to detect user input, as well as providing feedback to the user via the 16 x 2 LCD module at lower right.

We have used a 4 x 4 keypad to provide an economical array of 16 input keys – including the 10 keys used to input the numerals 0-9. The additional six keys are used to perform the following functions:

A key: tells the micro that you want to key in a new output voltage.

B key: a destructive backspace, for correcting input errors.

C key: toggles the Digital Potentiometer's output on/off.

D key: tells the micro that you want to key in a new input reference voltage in place of the default 10.000V.

*** key:** acts as the decimal point input key.

 # key: acts as the Enter key, to conclude an input entry.

The display on the LCD module shows the unit's status in each operating mode. When you are keying

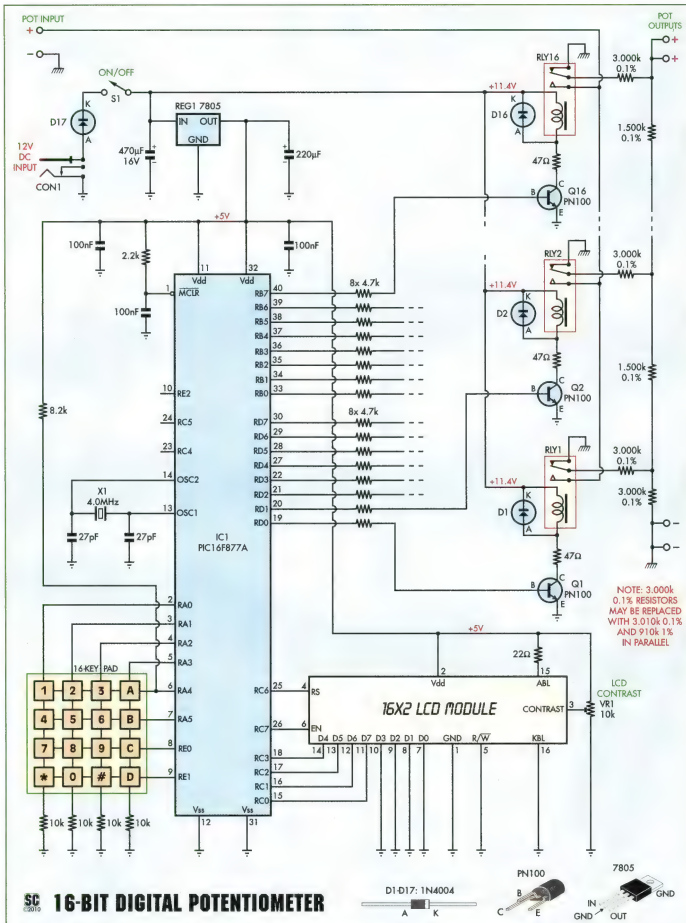

Fig.4: the circuit uses 3.000kΩ & 1.500kΩ 0.1% precision resistors in the R/2R ladder network. The PIC micro calculates the binary value from the entered data and drives relays RLY1-RLY16 via NPN transistors Q1-Q16.

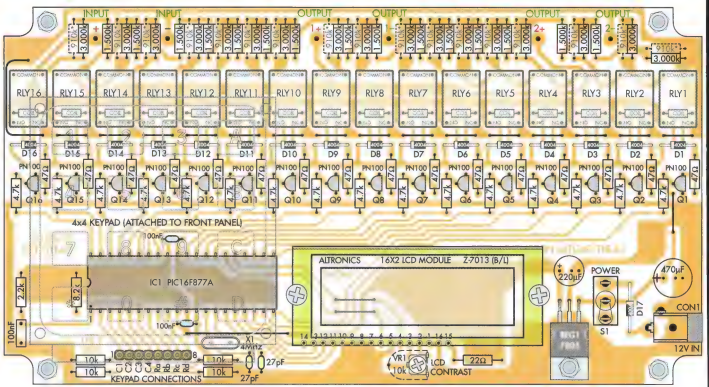

*NOTE: 910k 1% RESISTORS ARE ONLY REQUIRED IF 3.010k 0.1% RESISTORS ARE USED INSTEAD OF 3.000k 0.1% RESISTORS

Fig.5: install the parts on the PC board as shown on this overlay diagram and the photo at right. Be sure to use 0.1% tolerance resistors as specified in the R/2R ladder network (ie, for the 1.500kΩ and 3.000kΩ types) – see parts list.

in a new output (or input) voltage, it displays the digits as you enter them. In the normal mode, where the divider is set to provide a specific output voltage, it displays that voltage along with the assumed input voltage. Or if you have toggled the divider's output off, it displays "OFF" to remind you that there is currently zero output.

All the control circuitry operates from an external 12V DC supply, which can be a 12V battery or plugpack. The maximum current drawn is about 360mA when all 16 relays are switched on (ie, when the output voltage is 10.000V). This drops to around 50mA when the relays are all switched off (output OFF).

The relays are operated directly from the incoming 12V via series diode D17 which is used for polarity protection. The rest of the circuit (IC1 and the LCD module) operates from a regulated +5V rail, derived from the 11.4V line via a 7805 3-terminal regulator (REG1).

The only other items to mention are 4MHz crystal X1 (used for IC1's clock oscillator), trimpot VR1 which sets the contrast of the LCD module and the 22Ω resistor connecting to pin 15 of the LCD module. The latter sets the current for the LCD module's LED backlighting.

Construction

The Digital Potentiometer is fairly easy to build, with almost all components mounted directly on a single PC board coded 04107101 and measuring 184 x 99.5mm. The board assembly fits snugly inside a standard UB2-size jiffy box measuring 197 x 113 x 63mm. It mounts on the rear of the box lid on four M3 x 25mm tapped spacers.

The only parts not mounted directly on the PC board are power switch S1,

Table 2: Capacitor Codes

Value	µF Value	IEC Code	EIA Code
100nF	0.1µF	100n	104
27pF	NA	27p	27

Table 1: Resistor Colour Codes

❑	No.	Value	4-Band Code (1%)	5-Band Code (1%)
❑	4	10kΩ	brown black orange brown	brown black black red brown
❑	1	8.2kΩ	grey red red brown	grey red black brown brown
❑	16	4.7kΩ	yellow violet red brown	yellow violet black brown brown
❑	17	3.000kΩ	not applicable	not applicable
❑	1	2.2kΩ	red red red brown	red red black brown brown
❑	15	1.500kΩ	not applicable	not applicable
❑	16	47Ω	yellow violet black brown	yellow violet black gold brown
❑	1	22Ω	red red black brown	red red black gold brown

The LCD module is mounted on two M3 x 15mm tapped Nylon spacers and plugs directly into a 16-way SIL socket (see text for mounting details).

the 4 x 4 keypad and the six binding posts. These all mount on the box lid which forms the front panel.

As you can see from the photos, the panel layout is a little unusual. The keypad, LCD readout and power switch are all in the lower part of the front panel, while the input and output terminals are along the top.

This has been done for two reasons, one being to make the completed unit easier to "drive" when placed on a workbench or table. The other reason is that this PC board layout turned out to be the easiest and most logical. It allows the 16 mini relays and their drivers to fit in a row across the board between the ladder resistors at the top and the microcontroller circuitry at the bottom. So while it may seem unusual, you'll find it's easy to build and quite intuitive to use.

Fig.5 shows the parts layout on the PC board. Begin by fitting the 20 wire links, 16 of which are arranged in a horizontal row just below the 16 relays. Note that the link under relay RLY16 at far left is "U" shaped as it must loop around the relay to complete the earth return line for the relay contacts.

The remaining four links are in the lower half of the board, in the controller section. Two of these are under the LCD module while a third horizontal link is located just below the microcontroller. The final link runs vertically at centre right, just above the 470µF electrolytic capacitor.

Once the links are in place, fit all the "ordinary" (ie, 1%) resistors to the board. These include the 910kΩ resistors at the top if you need them plus all the resistors below the relays.

The 17 1N4004 diodes can now be installed, 16 of which run in a horizontal row just below the relays. These diodes must all have their leads bent down quite close to their bodies, so take care when bending them. Take care also with their orientation – they go in with the cathode bands to the left.

The last diode (D17) goes in just behind DC input socket CON1 at lower right. Note that its leads are bent down somewhat further away from the body and it's fitted with its cathode towards the top of the board.

VR1 (the LCD contrast adjust trimpot) is next, followed by the capacitors.

The keypad is fitted to the back of the case lid as shown here. In addition, you have to fit extension wires to the binding post terminals and to switch S1 before mounting the PC board.

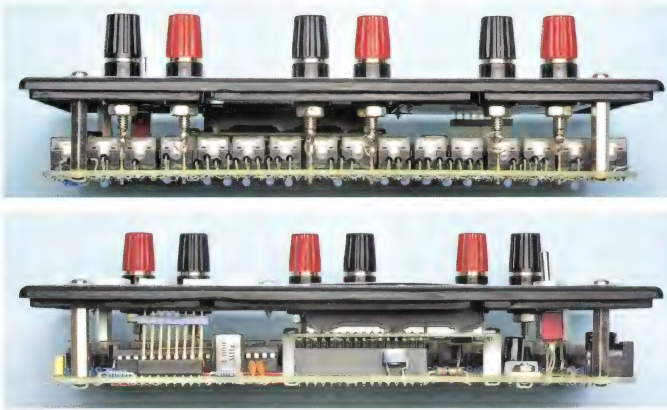

The PC board is secured to the back of the lid on four M3 x 25mm tapped spacers, with the keypad's SIL pin header plugging into a matching socket. Ignore the resistors shown on the copper side of the PC board – this is a prototype and all resistors go on the top of the board in the final version.

Most of these are relatively low-value unpolarised ceramic or metallised polyester types. The only two polarised capacitors are the 470µF and 220µF electrolytics, both of which go in at lower right. Make sure you fit these the correct way around.

Now you can fit DC input socket (CON1), the 40-pin socket for IC1 and the 16-way SIL socket for making the connections to the LCD module. Also fit an 8-way length of SIL socket strip for the keypad connections, at lower left on the board.

Driver transistors Q1-Q16 are next. They must be orientated as shown in Fig.5, after which you can install crystal X1. Solder the crystal's leads quickly, so that it doesn't get too hot.

Regulator REG1 can now go in. It mounts flat on the board, with its leads bent down by 90° about 6mm from its body. Secure it to the PC board using an M3 x 6mm screw and nut before soldering its leads (warning: don't solder the leads first, otherwise you could crack the PC board tracks as the mounting screw is tightened down).

Once the regulator is in place, install the 16 mini relays (RLY1-RLY16). These have a polarised pin layout, so they can only be fitted one way around.

Precision resistors

The "precision" resistors in the ladder network all fit along the top edge of the board, above the relays. There are 32 of these in all, consisting of two different values: 3.000kΩ (0.1%) and 1.500kΩ (0.1%). Fit the 15 x 1.500kΩ resistors first, followed by the 17 x 3.000kΩ resistors.

It's also a good idea to fit the 3.000kΩ and 1.500kΩ resistors with their bodies a couple of millimetres above the board. This will help ensure that the resistors are not overheated when their leads are being soldered to the pads underneath. You should also make the solder joints quickly, to minimise the risk of damage.

As mentioned previously, if you are unable to obtain 3.000kΩ 0.1% resistors, you can use 3.010kΩ 0.1% resistors instead. These must then each have a 910kΩ 1% resistor connected in parallel, to trim the values back to 3.000kΩ. Install these 910kΩ resistors only if necessary (they are shown dotted on Fig.5).

You can purchase 3.010kΩ resistors from either Farnell (Cat. 1083305, 9501886 or 1751494) or RS Components (Cat. 166-223).

LCD module

The only remaining component to install (apart from the PIC micro) is the LCD module. To do this, first attach two M3 x 15mm tapped Nylon spacers to the main PC board at the indicated mounting positions. These spacers can be secured using M3 x 6mm machine screws, passing up from underneath.

Next, plug the long ends of a 16-way SIL pin header strip into the SIL socket just above trimpot VR1, pushing the pins in as far as they'll go. The LCD module is then be fitted in position, with the top ends of the SIL header pins passing through the holes in the lower edge of the module.

Push the LCD module all the way down so that it sits against the spacers, then secure it using another two M3 x 6mm machine screws. A fine-tipped soldering iron must then be used to solder all 16 pins of the SIL header to the tiny pads along the top edge of the LCD module.

Having secured the LCD module, the next step is to carefully plug the PIC16F877A-I/P microcontroller (programmed with the 0410710A.hex firmware) into its 40-pin socket. Be careful

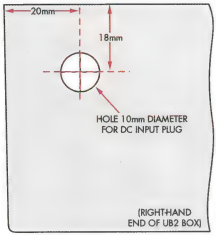

Fig.6: this is the drilling template for the DC input socket access hole.

with its orientation – its notched end goes to the left.

Preparing the case

At this stage, the PC board assembly is virtually complete. It can now be placed aside while you prepare the front panel and case. Most of this preparation involves the lid – the case itself only needs to have a single hole drilled in the righthand end to provide access to the 12V DC input socket (CON1). Fig.6 shows the drilling details.

Fig.7 shows the drilling details for the lid. This diagram is actual size, so a photocopy of it can be used as a template. Note that the 6.5mm and 9mm holes are best made by first drilling small pilot holes and then carefully enlarging them to size using a tapered reamer. That way, you can position them more accurately.

The two large rectangular cutouts are for the the LCD viewing window and the keypad. These are made by drilling a series of small holes around the inside perimeter of the marked area, then knocking out the centre piece and filing the job to a clean finish.

You are now ready to fit the front panel. Fig.8 shows the full-size front-panel artwork. This can either be photocopied or you can download it in PDF format from the SILICON CHIP website and print it out. The artwork can then be laminated, attached to the lid using double-sided adhesive tape and the holes cut out using a sharp hobby knife.

Front panel assembly

The 4 x 4 keypad mounts on the front panel in the larger cutout. However, before mounting it, you need to fit an 8-way length of "long-pin" SIL strip to the pads on the lower edge of the keypad board (to mate with the 8-way SIL socket on the main board). This is done by pushing the pin strip pins up through the holes near the lower edge of the keypad board so that they protrude by about 1mm – just enough to allow you to solder each pin to its mating copper pad.

Once the pin strip is fitted, the keypad can be passed up through the front-panel cutout and secured using four No.5 self-tapping screws. You can

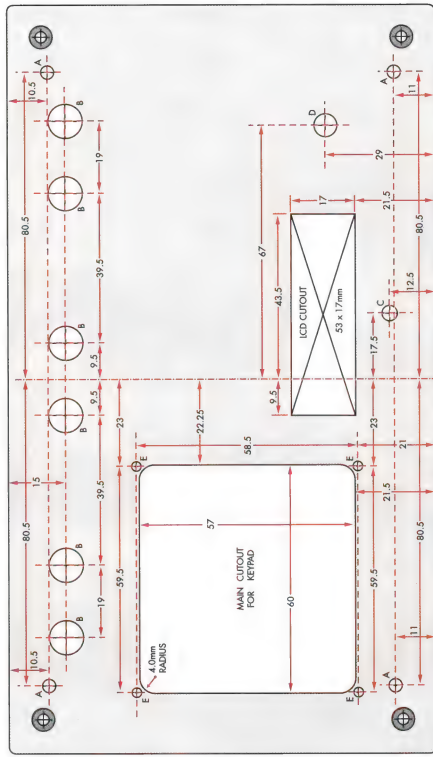

Fig.7: the drilling template for the lid. The rectangular cutouts are made by first drilling a series of small holes, then knocking out the centre pieces and filing the cutouts to a smooth finish.

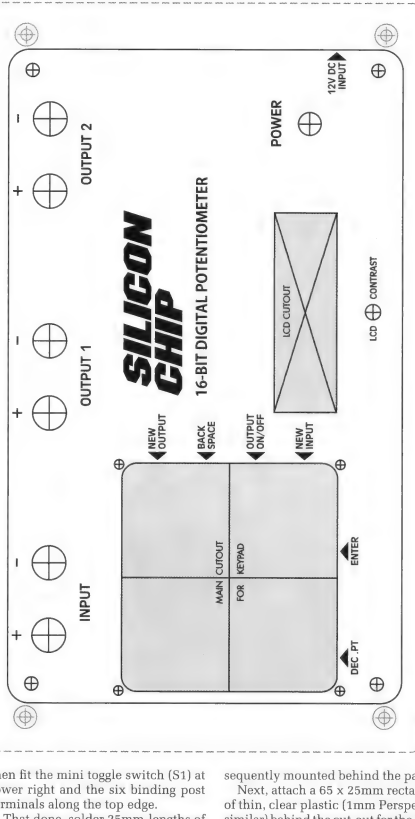

Fig.8: this full-size front panel artwork can be copied, laminated and attached to the case lid using double-sided adhesive tape.

then fit the mini toggle switch (S1) at lower right and the six binding post terminals along the top edge.

That done, solder 25mm-lengths of 0.7mm tinned copper wire to the three connection lugs at the rear of S1 and to the rear spigots of the six binding posts. These "extension wires" are to make it easier to complete the connections between these parts and the main PC board when the board is subsequently mounted behind the panel.

Next, attach a 65 x 25mm rectangle of thin, clear plastic (1mm Perspex or similar) behind the cut-out for the LCD panel (ie, to the rear of the front panel). This can be secured using either a few spots of contact cement or strips of adhesive tape around the edges.

Once it's in place, attach the four M3 x 25mm spacers to the rear of the lid using M3 x 6mm machine screws. Don't tighten these screws completely just yet though, because the spacers may need to be moved slightly when mounting the PC board assembly.

This next step is slightly tricky. That's because you need to make sure that the "extension wires" attached to S1 and the six binding posts pass through their matching holes in the board. At the same time, the pins of the 8-way SIL strip attached to the keypad must go into the matching header socket. This isn't all that difficult to do but you do need to be both careful and patient to get it right.

Push the board down until it rests on the spacers, then secure it using four more M3 x 6mm machine screws. The screws attaching the spacers to the front panel can then be tightened, after which the complete assembly can be upended and the various extension wires soldered to their pads on the board.

Your new 16-Bit Digital Potentiometer is now complete.

Checkout time

All you need for the initial checkout is a source of 12V DC capable of supplying 400mA or more. This can be either a 12V battery or a suitable mains plugpack. Fit a 2.5mm (ID) concentric plug to its output lead (positive to the centre pin) and plug it into CON1.

When you switch the power on via S1, you should be greeted by a warm yellow-green glow from the LCD module's backlighting. You should also see the initial greeting message, ie, "SC 16-Bit Digital Potentiometer". If this isn't displayed clearly, adjust trimpot VR1 with a small screwdriver to set the LCD module for optimum contrast.

By the time you do this, you should find that the message displayed has changed to "Output = OFF" on the top line and "(Input = 10.000V)" on the bottom line. This shows the default start-up settings, ie, with the divider relays all turned off so there is zero output and the firmware set for an assumed divider input voltage of 10.000V.

If everything checks out so far, try pressing the keypad's "C" (output toggle) key for about 300ms. This should result in the top line of the LCD display changing to "Output = 5.000V". At the same time, you should hear a faint "click" as some of the relays are energised to set the divider to the appropriate division ratio.

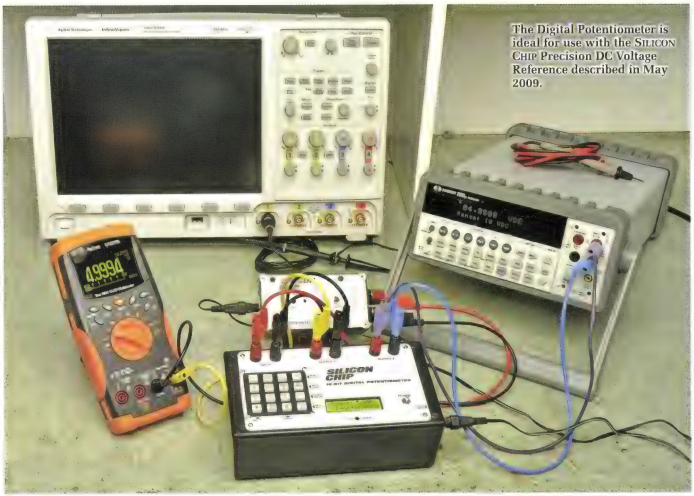

The Digital Potentiometer is ideal for use with the SILICON CHIP Precision DC Voltage Reference described in May 2009.

Assuming everything has happened as described, the unit has passed its initial checkout and can be fitted into its box to complete the assembly.

Using it

Using the Digital Potentiometer is very straightforward.

The first step is to connect its input terminals to the output of your Voltage Reference (eg, the 10.000V Precision Voltage Reference described in SILICON CHIP, May 2009). It's best to use external sensing and a 4-lead connection. That way, the Voltage Reference will maintain an accurate output voltage right at the Digital Potentiometer's input terminals.

One pair of the Digital Potentiometer's output terminals is then connected to the DMM (or to any other instrument you want to check). The other output terminal pair can be connected to another DMM (eg, if you want to use this as a reference).

It's now just a matter of applying power and using the keypad to enter the desired output voltage. This is done by first pressing the "A" key and then keying the voltage in as a five or six-digit number, including the decimal point (which is keyed in using the "*" key). If you make any errors, they can be corrected using the "B" key, which acts as a destructive backspace. The LCD readout shows the keypad entries.

If you are keying in a voltage of 9.999V or less, you only need to key in the significant digits, including the decimal point. You then press the "#" key, which is used here as an Enter key. The micro will then automatically fill in the remaining digit positions with zeros.

For example, if you key in "2.3#", this will give an output voltage of 2.300V.

The only variation from this sequence is if you key in an output voltage like 10.000V, which does require you to key in the full six values (including the decimal point). In that case, there's no need to press the "#" (Enter) key at the end in order to get the micro to accept this voltage setting. It will do so automatically after the sixth digit is keyed in.

If you need to disable the Digital Potentiometer's output voltage at any time, this is done by pressing the "C" key. The output can then be re-enabled by pressing the "C" key again (ie, "C" toggles the output on and off).

All of the above assumes that you are using the Digital Potentiometer with our May 2009 Voltage Reference, with its output of 10.000V DC. However, as mentioned earlier, the Digital Potentiometer is also suitable for use with other references, including those with output voltages such as 8.192V or 5.000V.

All that is necessary to use it with other reference voltages is to key in the new input voltage. This is done in a very similar way to keying in a new output voltage. The only difference is that before keying in a new input voltage you press the "D" key instead of the "A" key.

That's it – we hope you find the 16-bit Digital Potentiometer a useful addition to your workbench. SC

ALTRONICS

ONE-STOP ELECTRONICS SHOP **JULY 2010**

EVERYDAY ENTHUSIAST SAVINGS!

Sale prices valid until July 31st 2010

Dynamic Sound Processor & Volume Leveller

Improve your listening experience!

Are you sick of adjusting the volume on your telly whenever you switch channels or an ad comes on?

This tiny adaptor provides the solution! It connects in-line between your set-top box & amplifier and compresses or expands the audio signal to provide a constant level. It can even be used to regulate audio levels between radio stations or an MP3 player (a common source of music recorded at fluctuating levels). Includes plugpack.

$169 NEW! A 3800

JUMBO 4 in 1 Remote Control

NOW With IR Learning!

- Jumbo 20mm buttons
- Great for the kids!
- Simple layout reduces clutter and confusion
- Pre-programmed with 1000's of codes, plus infra red learning
- Requires 2 x AA batteries (S 4956 $6.80) • Size: 284 x 128mm.

$29.95 NEW! A 0977A

BARGAIN 3 Way HDMI Selector

$49.95 NEW! A 3084

An economical way to switch between 3 HDMI sources. Easy push button operation. No power required! Size: 104 x 120 x 26mm.

USB Datalogging SPL Audio Meter

Log & graph audio levels between 30dB and 130dB on your PC. Ideal solution for venues to ensure sound levels remain legal. Great for live venues, installers, pubs etc.

- Frequency range 31.5Hz-8kHz • 30dB to 130dB
- ±1.4dB accuracy • Sampling time between 1s and 24hrs
- Includes diecast stand • Requires 2 x AAA batteries. Includes software & drivers for Windows XP/Vista.

$139 SAVE $30 Q 1263

Test HDMI Leads Instantly

Great for AV system installers! A real time saver on site when troubleshooting installations - tests patch leads or in-wall cabling. LED feedback provides clear indication of continuity & faulty wiring. Requires 9V battery (S 4971 $5.95).

$75 SAVE $14 Q 2030

Digital TV Panel Antenna

Ideal for home or portable installs in caravans! Provides 25dB of gain for clear digital TV & digital radio reception. Includes power supply & PAL to F connection lead. Indoor or sheltered outdoor installation.

$49.95 NEW! L 2026

Test AV Leads In Just Seconds!

Allows quick and easy confirmation of cable integrity. Tests 6.35mm jack, 3/5/7/8 pin DIN, RCA, 3/5 pin XLR, S-Video, 3.5mm TRS, Speakon & Banana leads. Tough steel casing. Great for: PA AV & CCTV installers. Requires 9V battery (S 4971 $5.95).

$40 SAVE 20% Q 2021

FM Transmitter For MP3 Players

Transmits audio from any MP3 player to your car stereo. Car power adaptor included (also runs off 2 x AAA's). Easy to set up and use. 4 channels 107.1-107.9MHz FM band.

$19 SAVE 22% X 0600A

The Latest In Power Products...

Pure sine wave!

Turn a car battery into a 240V power source!

Power sensitive 240V mains appliances in your car or 4WD. Delivers pure AC power to difficult loads, such as laptops, switchmode plugpacks & game consoles. Includes USB output for charging your phone/MP3 player. 12V input, 300W surge rated. Size: 200 x 115 x 36.

$189 NEW! M 8010

Latest high efficiency design!

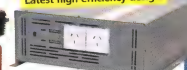

1000W Of Mains Power Anywhere, Anytime!

Efficient 'pure sine wave' design delivers pure AC power. Ideal for use in 4WDs, campers, caravans etc. High 3000W surge rating for powering difficult to start loads such as microwaves, computers and televisions. 12V input only. Size: 405 x 320 x 125mm.

$729 NEW! M 8017

Recharge Alkaline Batteries Up To 20 Times!

Recharge standard alkaline batteries and get the most from every battery you buy! This latest generation "green" charger will save you money AND reduce the number of batteries in landfills. Charges AA & AAA Alkaline or NiMH. Includes mains lead. Batteries not included.

$44.95 NEW! A 0280

'Ready To Go' Rechargeable Ni-MH Batteries

Ready for use right out of the pack! Recharge up to 1000 times. Holds up to 85% capacity even when unused for 12 months.

S 4704 AAA 800mAh.
S 4708 AA 2100mAh.

$19.95 per 4pk S 4708 AA

$11.95 per 4pk S 4704 AAA

Latest generation!

By far the BEST power supplies we have tested!

NEW Lab Power Supplies

With programmable preset outputs and adjustable current limiting. Featuring coarse/fine voltage & current adjustments, 5A auxiliary front panel output, precision digital LED meters & superb regulation. Size: 200 x 90 x 215mm.

$439 1-30V 20A M 8213

$439 1-15V 40A M 8221

Cut Power Bills & Save The Planet...

...with this energy saving power board. Allows a master appliance (ie TV to switch on/off slave appliances automatically, such as receiver, DVD player etc. **Can drastically cut stand-by power usage!**

$35 SAVE 12% P 8132

Great value AV brackets!

Reclaim your desk space!

Wall mount your LCD monitor and regain work space! Great for the office, study, kitchen, bedroom, theatre etc. 12kg max. Standard VESA mounting dimensions. 30° ball joint adjustment.

$35 SAVE 12% H 8185

$189 SAVE $40 H 8122A

Ceiling Mount Flat Screen Bracket

Mounts to the ceiling and provides adjustable swivel, tilt and height. Suits screens up to 60", weighing up to 50kg. Install yourself & save!

Great for bars, cafes & waiting rooms

$119 SAVE $30 H 8145

Low Profile Swing Arm LCD TV Bracket

Suits a wide range of TV's up to 32" utilising a 200mm VESA mount. Tough powdercoated silver finish. 10° tilt with precise thumbscrew adjustment. Max weight 50kg.

Tools & Test Equipment

129pc Handyman Tool Kit

$59.95 NEW! T 2172

Great for tackling jobs around the house, on the car, boat or 4WD! Includes a massive array of tools including hammer, pliers, allen keys, ratchet screwdriver, lug crimper, knife all supplied in a tough ABS case! See website for full list of contents.

Combo Wire Stripper & Kwik Crimper

Combines a spring loaded ratchet wire stripper, cutting blade and kwik-connect crimper in a single tool. Saves space in the toolbox! Suits 10-24 AWG cable. Crimps red/blue/yellow kwik connectors

$22 SAVE 26% T 1528

Crimps & strips!

$11.95 NEW! T 1490

Easy-Snip Scissors

Sharp stainless steel cutters designed for use with cloth, carpet, cardboard, foam & light duty cable.

$39 SAVE 13% L 2105 TV

$28 SAVE 15% L 2100 Satt.

Find Your TV 'Sweet-spot'

Provide instant feedback when adjusting your aerial/dish. Easy inline F type connection. Great for installers!

Super-Tough Equipment Cases!

IP67 rated for the ultimate dust and water protection for your precious equipment. Ideal for storing test equipment, cameras, computers and sensors. High density foam inner can be customised. Foam lined lid for secure fit. Latches can be padlocked. Includes shoulder strap.

Water tight, crush resistant & dust proof!

*Dimensions are external

$252 SAVE $63 T 5054 510x435x190mm

$180 SAVE $45 T 5052 460x350x185mm

$95 SAVE $24 T 5050 335x250x165mm

SUPER SAVINGS

Analogue Multimeter

Back by popular demand! Ideal for observing constantly varying quantities, such as cycling voltages or speaker resonance testing. Features: 20kΩ/Volt sensitivity • 10A DC current • Fuse & diode protection • Mirrored scale • Includes test leads.

$44.95 NEW! Q 1026

Professional Autoranging DMM

Push button controls for easy one handed operation! Multifunction backlit display shows date, time, bar graph & measured reading simultaneously • 3 measurements per second logging for up to 11 min • Resistance, frequency, duty cycle, capacitance, continuity, AC/DC voltage & current ranges • 10A rated • Includes shock proof rubber holster & test leads.

$69.95 NEW! Q 1071

Records up to 11 min of measurements to internal memory!

12VDC Power Tester

A handy test tool for security installers & technicians! Checks voltage, voltage drop, battery load, polarity and PTC fuse integrity. Also detects AC power when connecting cameras in CCTV installations.

Quick croc clip connection

$34.95 NEW! Q 3210

$74.95 NEW! Q 1282

Contact Free Digital Thermometer ...with laser guided beam for pin point accuracy!

Lightweight, "point & shoot" temperature measurement. Provides accurate readings from a distance. Ideal for measuring whilst equipment is operating. 0.1° accuracy from -20°C to 270°C.

Looking for a more professional IR thermometer? Check out our new Q 1284 and Q 1286 models.

Water & Dustproof (IP67) True RMS Multimeter

Top of the range. Ideal for marine & mining technicians. Beware of cheaper models which may look similar but don't have these high end capabilities. • True RMS measurement • 40MHz Frequency counter with bar graph • Max/min recording • Capacitance to 40mF. **Plus these great features:** • Jumbo LCD • Temp measurement • 10A current range • Includes thermocouple • Data hold

$99 SAVE $20 Q 1088

CCTV & Security...

See In The Dark CCD Camera

Upgraded model with vandal resistant weatherproof housing! Excellent low light performance coupled with sharp clarity day time use. Sturdy housing suits indoor and outdoor installs such as under eaves, patio's etc. M 9272A plugpack to suit $17.95.

$109 NEW! S 9115C

In-Vehicle Camera & Digital Video Recorder

Records full motion video & audio to an internal Compact Flash (CF) card. Automatically records whenever power is on - perfect 'set and forget' recording device. Ideal solution for monitoring fleet vehicle use, providing instant information when analysing accidents, malicious damage, driver assaults, etc. Includes 8GB card, PC software & car accessory power lead.

$329 SAVE $70 S 9430

Wall Mount IR Beam Sensor

Ideal for alarm triggering across wide entrances such as rollerdoors or driveways. NO/NC trigger output. 40m range. Adjustable beam range. Requires 11-18VDC power.

$89 NEW! S 5333

Water & dust proof housings

Project Parts...

$19.95 NEW! W 0884 Coloured W 0886 Black

Handy Heatshrink Pack

A must have for the workbench! Includes 160pc's of 100mm heatshrink in 1.6, 2.4, 3.2, 4.8, 6.4 and 9.5mm sizes.

Great for automotive wiring!

Waterproof USB Connectors

A matching pair USB type A connectors. Includes PX9721 USB male with 1m lead & P 9719 chassis female socket. Fully water & dustproof.

$20 SAVE 44% PX9721$

$34.95 NEW! S 0090

Super compact!

Mini Timer Module

May be used to extend the activation time for a momentary contact between 1 and 180s. Triggered by NC or NO contacts. 12-24V AC/DC operation. Max 3A.

Compact Battery Cut Off Module

Protect your investment! This tiny module prevents damaging discharging of sealed lead acid (SLA) cells. Suits 12 or 24V batteries. Adjustable cut off point & master on/off switch.

$32.95 NEW! M 8550

Ensures maximum battery life!

6V Powertran Transformers

HUGE BULK BUY SAVING! 150mA max. 240V AC primary, 6V secondary. Ideal for low current mains powered projects.

10 For $30 SAVE 55% M 2835L

Top Quality AV Gear & More!

$229 SAVE $20

Digital TV For Your Car, Caravan Or Boat!

This 7" wide format LCD screen will amaze you with its clarity. It displays TV stations via an inbuilt digital (DVB-t) and analog tuner. Plus it can display photos, playback MP3s and videos via its inbuilt USB and SD card slots. Includes remote control. Powered by the included portable 10xAA battery box (S 4943 batteries Pk16 $11.95), mains plugpack or car accessory socket. Easy setup & installation! 1440 x 234 resolution panel.

S 8860B

Extend the range of your remote control!

FANTASTIC PRICE!

A standard infra red (IR) remote is great if you're in front of the telly, but what if you're in the kitchen or study? This kit converts infra-red to long distance RF signal adding up to 30m range to your remote - even through walls and floors. The RF transmitter simply fits in place of a battery inside your existing remote control. Includes power supply.

$99 SAVE $30

A 1150

Subwoofer Sensation!

We sold 1000's of our old model - now we've added remote control! This high power subwoofer adds mind blowing realism to your home theatre or stereo system. Massive 180W 10" driver with built in amplifier producing a tiny 0.1% THD. A stunning frequency response of 35Hz-1KHz • level control • crossover adjustment • phase reversal switch. Pick up a 10m subwoofer lead to suit P 6424 $34.90.

Fully adjustable via remote control - no need to get off the couch!

$349 SAVE $50

C 5201

Fully sealed & UV stabilised!

Great Sound for the Boat!

Weatherproof 6x9" speakers designed for long life even in marine or tropical areas. Maintenance free outdoor sound! Also great for tour boats, yachts, caravans, even 4WD's. 30W RMS. 4Ω.

$129/pr NEW!

C 0844

Entertainers Balanced Mic

Ideal for singers, MC's and bands. Excellent reproduction from the cardioid insert. Diecast body with rubber coating. Includes 5m XLR cable.

Stunning audio reproduction!

$129 SAVE $20

C 0389

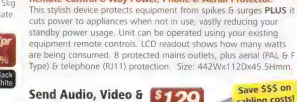

Universal Wacki® Brackets

Installs in minutes! Great for mounting speakers & cameras. Plate can be removed to become an M6 mounting thread if required. 50° adjustment. 5kg max. 31x52mm plate.

$15/pr SAVE 50%

HF8010 Black
HF8012 White

Protect Valuable AV Gear From Surges & Spikes.

Actively reduces your power bill!

$149 NEW!

P 8140

Powershield® Theatreguard Remote Control 8 Way Power, Phone & Aerial Protector. This stylish device protects equipment from spikes & surges **PLUS** it cuts power to appliances when not in use, vastly reducing your standby power usage. Unit can be operated using your existing equipment remote controls. LCD readout shows how many watts are being consumed. 8 protected mains outlets, plus aerial (PAL & F Type) & telephone (RJ11) protection. Size: 442Wx112Dx45.5Hmm.

Mount PC Screens Direct To Your Desktop.

No drilling required - easy desk clamp mount! These stylish brackets support up to 13.5kg per monitor (suits 10-24" screens). Available in single or dual screen. Swing arm allows easy tilt adjustment up to 50°.

$159 Single

H 8220

$199 Dual

H 8222

Send Audio, Video & Infra-Red Over Long Distance.

Save $$$ on cabling costs!

$129 NEW!

S 9253

Transmit stereo audio, composite video & infra-red (IR) control signals over Cat5e cable. Up to 300m! Kit includes transmitter, receiver, IR target, IR emitter & power supply.

Long Distance Cat6 HDMI Sender

$189 NEW!

A 3217

Allows you to send a full 1080p HDMI signal up to 50m away! Requires only one length of Cat6 cable (unlike our A 3216 model which requires 2 x Cat5e). Includes transmitter, receiver & plugpacks.

Extends HDMI up to 50 metres!

Ideal for fishermen, market gardeners, boating enthusiasts, avid 'green thumbs' etc.

Monitor & Record Weather Conditions At Home

$169 SAVE 13%

X 7062

Providing an instant snapshot readout of conditions, plus the ability to log long term trends via PC! A comprehensive weather monitoring pack containing wireless sensors, touchscreen base-station and PC software allowing you to log indoor/outdoor temperature, humidity, barometric pressure, rainfall, wind chill, wind speed and direction. Requires 5 x AA batteries (S 4956 $6.80 pk/4). Base station dimensions 230 x 145 x 33mm. Windows 2000/XP/Vista/7 compatible.

Professional Audio Gear

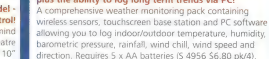

Great for DJs, bands and venues!

Biema® 2x500W RMS Amplifier

$700 SAVE 50%

A 4180

Up to a whopping 1500W RMS in bridged mode! This high-spec USA-designed Biema amplifier packs outstanding power & performance in a compact 88mm (2RU) case. A rugged beast that's built to perform! **Features** • Stereo or parallel bridged • 6.35mm and balanced XLR inputs • Binding post and Speakon connection • Host of protection features • 2 year warranty.

Loud Hailer For Events

Great for addressing crowds at events & rallies. 18W output covers up to 100m with ease!

BONUS! 8 x C cell batteries to suit, valued at $27.80 (S 4966).

$149 VALUE!

A 1980AS

3 Channel Karaoke/Mic Mixer with EQ

• Adjustable echo, delay and repeat • 3 band EQ for mic inputs • 7 band EQ for audio output • Two AV line inputs & outputs for connection between DVD/CD player & television.

TOP QUALITY!

BONUS!
FREE C 0392 Professional Redback micphone & 6m XLR lead, valued at $125.

$349 VALUE!

A 4440S

USB Background Music Player

Great for restaurants, cafes and offices. Simply plug in a USB stick, connect the RCA output to your amplifier and press play! It even automatically loops the music. Requires M 9272A 12VDC plugpack $17.95.

$89.95 NEW!

A 2710

ALTRONICS
ONE-STOP ELECTRONICS SHOP

No Risk 14 Day Money Back Guarantee

If you are dissatisfied with our goods for any reason, return to our premises within 14 days for a full refund (less transport costs). Returned items must be in NEW condition with all packaging and instructions.

DIY Project Ideas!

NEW!

Power LED Garden, Shed or Security Lights FREE from the Sun!

Solar Lighting Controller Kit

(SC May-Jun '10) When coupled with a 5W solar panel (N 0005A $35) & 3 3Ah battery (S 5063 $15.95) this kit allows you to power up to 10W of LED lamps for 2.5 hours a day - without any mains power! It accepts inputs from a remote switch, PIR movement detector or ambient light sensor (automatic dusk switching). Includes Maximum Power Point Tracking (MPPT) to ensure you get every last watt from your solar panel! Direct LED drive makes connection easy (we suggest 3 x 3W star LEDs such as Z 0259A $16.95ea). The battery is protected from over charging & discharging.

$89.95 NEW KIT!

K 6028

Great fun for the kids!

$69.95 NEW KIT!

K 1107

Robotic Arm Kit

A great introduction to basic robotics and electronics!

Includes five motors allowing base rotation, shoulder, elbow and wrist motion, plus claw for picking up objects (up to 120g). Includes wired controller. Add on the K 1108 USB interface/software kit for full control from your PC ($39.95).

High Voltage DMM Adaptor Kit

Allows measurement up to a whopping 25kV on a standard DMM! (SC April '10). Ideal add on for your multimeter to allow voltage measuring on CRT based scopes, computer monitors, TVs, laser printers, photocopiers etc. Note: case not included, shortform only.

$28.95 NEW KIT!

K 2559

Web Server In A Box (WIB) Kit

Great for remote monitoring & control

(SC Nov '09) Host and update your own website without the need for a computer! This compact box houses a chip based server that may be accessed anywhere in the world - even from a mobile phone. Beyond serving web pages it can also monitor & log 4 analog inputs, or control 4 digital outputs for remote activation of devices.

$89.95 NEW KIT!

K 6210

Efficient Car/Motorbike USB Charger Kit

Ultra efficient charging module suitable for permanent connection to your vehicle. Operates at 89% efficiency, with a very low quiescent current when not in use so it won't flatten your battery! 12V input, 5V 525mA output. Ideal for MP3 players, GPS devices & game consoles.

$28.95 NEW KIT!

K 1681

$49.95 NEW KIT!

K 5136

Stereo 2x20W 12V Amplifier Kit

This compact amp module puts out 2x20W RMS into 4Ω and is powered by a 12V source (such as an SLA battery). It could be used by buskers or installed in your caravan or boat. Distortion typically <0.03%. Bass & treble controls.

LED Strobe & Tachometer Kit

(SC August '08) Allows you to measure the RPM of fans, rotating shafts, propellers or anything that rotates! Readout displays RPM and frequency simultaneously. 1RPM resolution for excellent accuracy. Adjustable flash period and divider options. Requires 12VDC power.

$79 SAVE $10

K 2510

Measure up to 65,000 RPM

Take The Guess Work Out Of Fixing Your Car!

This OBD II Car Interpreter kit allows you to obtain readouts from a multitude of engine sensors. (SC Feb '10). If you have a car equipped with an OBD II port this kit can provide real time data and diagnostics on your laptop, with use of free software. Ideal for mechanics & car enthusiasts. Allows you to track down problems in quick time. May require a RS232 to USB converter, D 23408 $29.95.

$149 NEW KIT!

K 4065

A great tool for servicing your own vehicle!

$200 OFF!

Silicon Chip 100W Class AB Amplifier

$549 SAVE $200

K 5155

Digital Audio Signal Generator Kit

(SC March '10). With S/PDIF coaxial and optical output - plus dual analog outputs! Incredibly low distortion (typically <0.06%). Sine, square, triangle and sawtooth wave generator. Plus waveform mixing, pulse and sweep modes. Ideal for RMS and music power testing of amps or speakers; testing DACs & crossover optimisation. Requires 4xAA or 9V plugpack (M 8925A $24.95).

$149 NEW KIT!

K 2553

Professional Finish - Sensational Sound!

(SC Nov-Dec '01) Similarly spec, brand name amplifiers sell for over $2000! Build this kit yourself and save a FORTUNE! Produces 100W RMS per channel with almost unmeasurable low levels of distortion due to its MOSFET design. Features: LED bargraph meters • Gold plated speaker terminals • 19" Rack or desk mount • Screened and pre-punched chassis for a professional finish • CD, Tuner, DVD, Tape & Aux inputs • Supplied with 19"rack mount kit. 240V operation.

Sale Ends July 31st 2010

Altronics One-Stop Electronic Shops Phone 1300 797 007 Fax 1300 789 777

Mail Orders: ©/- P.O. Box 8350 Perth Business Centre, W.A. 6849

© Altronics 2010. E&OE. Prices stated herein are only valid for the current month or until stocks run out. All prices include GST and exclude freight and insurance. See latest catalogue for freight rates.

Resellers

WESTERN AUSTRALIA

Bunbury	ML Communications	9721 9800
Esperance	Esperance Communications	9071 3344
Geraldton	ML Communications	9965 7555

QUEENSLAND

Airlie Beach	Plaza Electronics	4946 6550
Brisbane South	Delsound	3397 8155
Brisbane North	Prime Electronics	3252 7466
Capalaba	Diggy Technology	3245 0000
Cairns	Pentacom	4032 1710
Glenvurry	Access Electronics	4742 2590
Dalby	Camera House	4662 3208
Gold Coast	Prime Electronics	5531 2599
Hervey Bay	Leading Edge Electronics	4124 1490
Innisfail	Leading Edge Electronics	4061 6214
Kingaroy	SB Computers	4160 4800
Longreach	Access Electronics	4658 3500
Maryborough	Leading Edge Electronics	4121 4559
Mossman	Leading Edge Electronics	4098 2200
Rockhampton North	Home Delivered Computers	4928 2555
Rockhampton South	Access Electronics	4922 1058
Toowoomba	Michael's Electronics	4632 9990
Townsville	SOLEX	4771 4211
Yeppoon	Keppel Electronics	4939 1555

VICTORIA

Alexandra	Alexandra Air Con & Appliance Centre	5772 1147
Ballan	Radcomp	5368 1761
Beaconsfield	Electronic Connections	9768 9420
Benalla	North East Electronics	5762 2710
Castlemaine	Top End Technology	5472 1700
Clayton	Rockby Electronics	9562 8559
Cranbourne	Bourne Electronics	5996 2755
Croydon	Trussoni's Electronic World	9723 3660
Geelong	Academy TV Australia	5248 2621
Geelong	Music Workshop	5221 5844
Healesville	Amazon DVDs Healesville	5962 2763
Horsham	Leading Edge Electronics	5382 4150
Leongatha	Gardner Electronics	5662 3891
Melton	Melton Electronics & Computers	9743 1233
Pakenham	Get Smart Hifi	5941 4886
Preston	Preston Electronics	9484 0191
San Remo	Shoreline Electrical Wholesalers	5678 5361
Swan Hill	Lateral Systems	5032 2322
Warrnambool	Koroit St Electronics	5561 5111
Wodonga	Exact Computers & Home Ent.	6056 5746

NEW SOUTH WALES

Brookvale	Brookvale Electrical Distributors	9938 4299
Caringbord	Caringbord Music Centre	9573 2333
Dassnock	Leading Edge Electronics	4990 5971
Cobar	Cobar Electronics	6836 2962
Dankjun	Wired Entertainment	5881 3555
Griffith	Griffith Systems Plus	6964 5933
Gunnedah	Protronics	6742 2110
Lithgow	Leading Edge Electronics	6352 3333
Mudgee	Home & Office Electronics	6372 1822
Nth Richmond	CPT-Candle Power Technologies	4571 4699
Oak Flats	Oak Flats Electronics	4256 6120
Orange	Fordrey Electronics	6362 9001
Penrith	Penrith Light and Sound	4732 3333
Port Macquarie	Fettai Communications Pty Ltd	6581 1341
Raymond Terrace	Leading Edge Electronics	4987 4909
Smithfield		9609 7218
Tamworth	Bourke Street Electronics	6766 4664
Taree	Noteledge Systems Pty Ltd	6551 3622
Ulladulla	Leading Edge Electronics	4454 5588
Wagga Wagga	Wagga Car Radio & Hi-Fi Pty Ltd	6925 6111
Waterloo	Herkes Electrical Supplies	9319 3133
Wetherill Park	Technion Electronics Pty Ltd	9604 9710
Windeta	Mail Electronics	4297 7373
Wyong	CCRV - Pro Disc	4353 1100

SOUTH AUSTRALIA

Adelaide	Altronics	8212 6212
Berri	Gardeners Berri Radio & TV	8582 1788
Brighton	Force Electronics	8377 0512
Enfield	Altronics	8349 6340
Findon	Force Electronics	8347 1188
Kadina	Wallsaround	8821 2300
Renmark	Leading Edge Electronics	8586 6421
Till Barker	Force Electronics	8391 1133
Milton	Leading Edge Electronics	8682 4911

TASMANIA

Hobart	Active Electronics	6231 0111
Launceston	Active Electronics	6334 7333

NORTHERN TERRITORY

Katherine	Leading Edge Electronics	8972 3907

NEW ZEALAND

Christchurch - Riccarton	Global PC	3 3434475
Christchurch - Shirley	Global PC	3 3543333

Join our email newsletter for special offers, kit & new product updates.

Log on to www.altronics.com.au to register instantly!

Dual Tracking ±0-19V Power Supply

Pt.2: By NICHOLAS VINEN

Last month, we introduced our new Dual Tracking ±19V Power Supply and explained how it works. This month, we show you how to build the PC boards, install them in a case, wire it up and get it going. Both the mains-powered and plugpack-powered versions are covered.

AS MENTIONED last month, there are two versions of this supply – one powered via an internal mains transformer and the other via an external AC plugpack. These instructions concentrate on the mains-powered version, which can supply more output current. If you want to build the plugpack version, check the panel at the end of the article.

Main board assembly

Fig.8 shows the parts layout on the main PC board (code 04206101). Start by carefully inspecting the underside of the board for any cracks in the copper or short circuits. That done, install the 20 wire links using 0.71mm tinned copper wire. You can substitute 0Ω resistors for some of the shorter links if you prefer, although none have been specified in the parts list.

After that, mount the six 1N4148 small-signal diodes (D11-D12 & D13-D16). Note that D11 & D12 face in opposite directions.

Next solder in all the 0.25W resistors. If you are building the plugpack version don't forget to install a 150kΩ resistor instead of the 91kΩ resistor to reduce the current limit appropriately. Check each resistor with a DMM before installing it since the colour codes can sometimes be difficult to read.

Follow with the 10 1N4004 power diodes (D1-D10). Six of these have a short lead spacing (0.3-inch or 7.62mm), so their leads must be bent right at the diode bodies so that they

sit flat on the board. After that, solder the TVS (or the alternative 5W zener diode) into place. Leave some space between it and the board (about 3mm), as it will get very hot if the 5V output is shorted for more than a couple of seconds.

Now you can install the four DIP ICs. Make sure they go in the right way around – see Fig.8. Sockets have not been specified but can be used if desired. After the ICs, mount the five trimpots. Regular horizontal or Piher-style mini trimpots can be used. They all have the same value and can only go in one way.

Next on the list are the BC549 & BC559 transistors (Q1 & Q2) and the 78L15 & 79L15 regulators (REG3 & REG4). These are all in TO-92 plastic packages, so check their markings carefully to ensure they each go in the correct position. Be sure to orientate them as shown in Fig.8 and use small pliers to bend their leads if necessary, so that they fit the PC board holes.

Once they're in, install the five 100nF MKT capacitors, then solder the 16-pin IDC socket in place. Line up the notch in the socket as shown on the overlay (ie, towards the top) and check that the socket is sitting flat against the PC board before soldering its pins.

LEDs 1 & 2 can now go in (they are orientated in opposite directions), followed by the three screw terminal blocks (CON1-CON3). Be sure to install the latter with their entry holes facing outwards. The four polarised headers (CON4-CON7) can then be installed with their plastic locking tabs orientated as shown. Again, make sure they sit flat against the PC board before soldering their pins.

Follow these parts with the 10µF and 100µF electrolytic capacitors, taking care to ensure they are correctly orientated. The two 0.1Ω resistors can then be installed. These resistors only dissipate about a 0.25W each, so they can be mounted flush against the surface of the board.

Mounting the regulators

Regulators REG1 (LM317T), REG2 (LM337T) & REG5 (7805T) can now be mounted along the top edge of the board – see Fig.8. Don't get them mixed up and be sure to push them down all the way into the holes before soldering one pin of each regulator.

That done, check that each tab is at a right angle to the PC board before

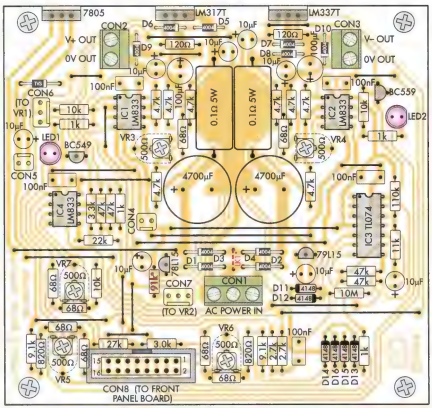

Fig.8: follow this parts layout diagram to build the main PC board. Make sure that all polarised parts are correctly oriented and be careful not to get the regulators mixed up.

The completed main board prototype differs only slightly from the final version shown in Fig.8. It's connected via a number of cables that terminate in headers and screw terminal blocks.

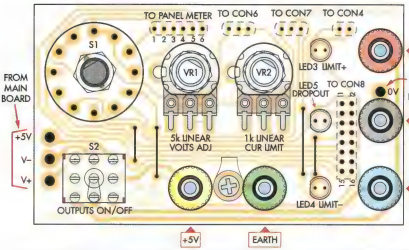

Fig.9: follow this layout diagram and the photograph below when building the front panel PC board. Note that the binding post terminals are soldered to the board after they have been mounted on the front panel.

Fig.10: this assembly is only required if you are using the Altronics LCD panel meter. The LED panel meter already comes on its own PC board with a header.

soldering its remaining leads (if it isn't, re-melt the solder on the first lead and adjust it).

Once the regulators are in place, all that's left are the two large electrolytic capacitors. Once again, take care with their orientation.

Front panel board assembly

The smaller front panel board is coded 04206102 and the parts layout is shown in Fig.9.

Begin by installing the four wire links. You can either use 0.71mm tinned copper wire or 0Ω resistors if preferred.

That done, use flat pliers to bend the pins of the two 16mm potentiometers at right angles, so that they project out in the same direction as the shafts. Bend them as close to the potentiometer bodies as possible, then remove the nut and washer from each pot.

Next, take the 5kΩ potentiometer (VR1) and insert the shaft through the indicated hole on the PC board, with the body on the copper side. When it is correctly orientated, the metal tab will fit through the small adjacent hole.

The potentiometer's pins should just touch the three corresponding pads but it's OK if they don't quite reach – solder can bridge the gap. Line the pins up with the pads and place the washer and nut over the shaft. Do the nut up finger-tight, then centre the pins in the pads and solder all three.

Once the pins have been soldered, tighten the nut down firmly. It is also a good idea to flood the pad around the small metal tab with solder. It probably won't adhere to the metal of the pot, but it will help prevent strain on the soldered pins when the shaft is rotated.

Repeat these steps for the 1kΩ potentiometer (VR2) which goes alongside.

The next step is to install the 6-way, 2-pole rotary switch (S1). There are two different ways it can be orientated and only one is correct. The mounting procedure is as follows:

(1) Rotate the switch shaft all the way in one direction then back two positions (ie, back two clicks).

(2) Fit the switch to the board so that the flat part of its shaft faces towards the bottom of the board (ie, towards toggle switch S2).

(3) Solder one of the outer pins and check that the switch body is sitting flat against the board. Check it from all angles since it has four plastic "feet" and they must all be touching the surface. If this checks out, solder the diagonally opposite pin, then check the switch again before soldering the remaining pins.

The rotary switch shaft needs to be shortened and now is a good time to do it. It only takes a few strokes with a hacksaw to cut through the soft plastic. Cut it so that its end lines up with the ends of the potentiometer shafts (ie, about 28mm above the board surface), then use a fine file to remove any swarf. This will leave a stub a little under 10mm long, which is just enough to attach the knob.

It's better to err on the side of cutting it slightly too long and file it down if necessary.

Next, install switch S2. It must be orientated so that the switch actuator operates vertically. Press it down hard into the holes until it is sits flat on the PC board, then secure all nine tabs by flooding each hole with solder.

LEDs3-5 can now be installed. The middle one (LED5) is a red high-

Table 1: Resistor Colour Codes

❑	No.	Value	4-Band Code (1%)	5-Band Code (1%)
❑	1	10MΩ	brown black blue brown	brown black black green brown
❑	1	150kΩ	brown green yellow brown	brown green black orange brown
❑	1	110kΩ	brown brown yellow brown	brown brown black orange brown
❑	1	100kΩ	brown black yellow brown	brown black black orange brown
❑	1	91kΩ	white brown orange brown	white brown black red brown
❑	1	82kΩ	grey red orange brown	grey red black red brown
❑	4	47kΩ	yellow violet orange brown	yellow violet black red brown
❑	1	27kΩ	red violet orange brown	red violet black red brown
❑	1	22kΩ	red red orange brown	red red black red brown
❑	1	11kΩ	brown brown orange brown	brown brown black red brown
❑	2	10kΩ	brown black orange brown	brown black black red brown
❑	2	9.1kΩ	white brown red brown	white brown black brown brown
❑	8	4.7kΩ	yellow violet red brown	yellow violet black brown brown
❑	1	3.3kΩ	orange orange red brown	orange orange black brown brown
❑	1	3kΩ	orange black red brown	orange black black brown brown
❑	2	2.7kΩ	red violet red brown	red violet black brown brown
❑	4	1kΩ	brown black red brown	brown black black brown brown
❑	2	820Ω	grey red brown brown	grey red black black brown
❑	1	470Ω	yellow violet brown brown	yellow violet black black brown
❑	2	120Ω	brown red brown brown	brown red black black brown
❑	7	68Ω	blue grey black brown	blue grey black gold brown

brightness type, while the other two are standard amber or orange LEDs. They must be installed with their bodies 12mm above the PC board.

The easiest way to do this is to use a cardboard spacer. Cut a piece of cardboard 12mm wide and place it between the legs of the first LED to be installed. Insert this LED into the PC board with the flat side orientated as shown and push it down against the cardboard spacer. It's then just a matter of ensuring that the LED is perpendicular to the board before soldering its leads.

This procedure is then repeated for the other two LEDs.

LCD adaptor board assembly

This board (code 04206103) is only necessary if you are using the LCD panel meter. Aside from the meter, the only other component mounted on it is an 8-way right-angle polarised header.

Fig.10 shows the assembly details. Begin by mounting the polarised header. Orientate it as shown and make sure it is sitting flat against the board before soldering it in place.

The LCD can now be fitted. It goes in with the label that carries the model number (720000) towards the top. The adjustment trimmer on the rear of the LCD meter should also be closer to the top.

The alternative LED panel meter comes with a header already mounted on the rear (see Fig.11), so an adaptor board isn't necessary.

Attaching the ribbon cables

Unfortunately, headers can not be fitted to the front-panel board because it is too close to the front panel itself. As a result, all the wires to the front panel are soldered into place, the exception being the earth wire which is attached via a crimped eyelet connector.

All the permanently soldered wires either have connectors which mate with headers on the main board and display panel, or they go to screw terminal blocks. This makes it quite easy to remove the main PC board if necessary.

First, it is necessary to cut ribbon cables of appropriate lengths. Here's the procedure:

(1) Take a piece of 16-wire ribbon cable and cut it into three lengths: 200mm (A), 120mm (B) and 120mm (C).

(2) Separate lengths A and B into smaller wire bundles as shown in Table 3. You can do this by making a small nick between strands (with fine scissors) and then gently pulling the wires apart until you are left with two smaller ribbons. Cut these ribbons to the lengths shown in the table.

(3) Take the Voltage Adjust, Current Adjust and LED Power cables and separate the strands at each end by 10mm. Strip 5mm of insulation from each (an automatic stripping tool will make this much easier, as it will strip all the wires in the ribbon at once). Tin the exposed conductors.

(4) Solder these three ribbon cables to the front panel board where indicated on the overlay (ie, at the "TO CON6", "TO CON7" and "TO CON4" positions). The cables enter from the non-copper side. The order of the colours doesn't matter, but if you make them match the wiring diagram (Fig.11), it will be easier to follow.

(5) Install a polarised header connector at the other end of each of these cables. It's just a matter of crimping and then soldering the header pins to the various leads before pushing them into the plastic header blocks (a soldering stand with alligator clips is handy for holding the pins as they are soldered).

Be sure to double-check that the connector orientation will be correct once the pins are inserted. The small metal tags on the pins line up with the rectangular slots in the sides of the blocks.

A small flat-bladed screwdriver

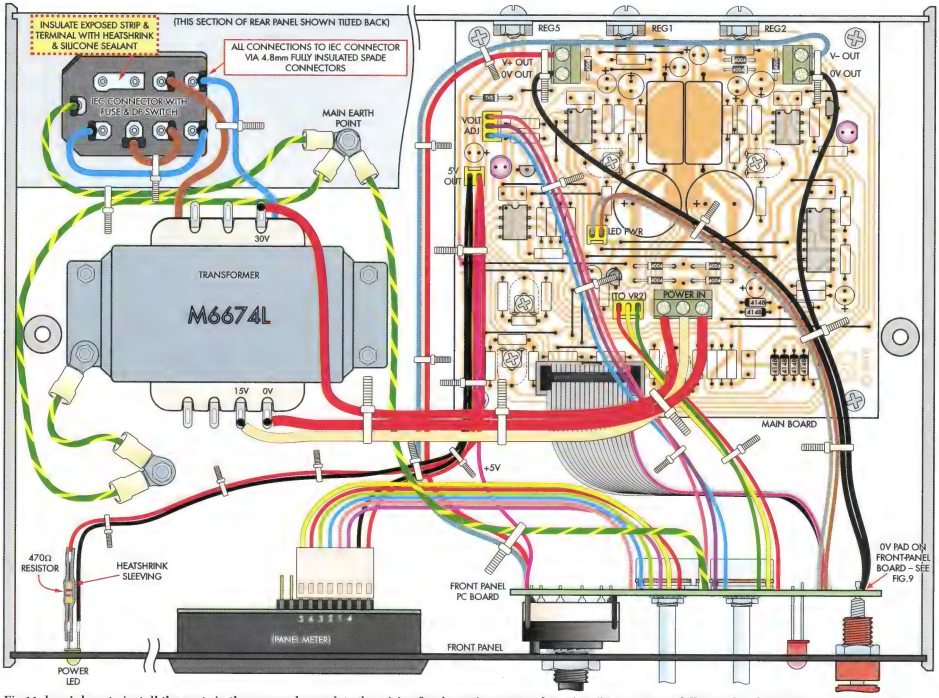

Fig.11: here's how to install the parts in the case and complete the wiring for the mains-powered version. Be sure to use fully-insulated spade connectors for all connections to the IEC socket and fit cable ties to the low-voltage and signal leads so that they cannot possibly contact the IEC connector if they come adrift.

(1mm wide) can be used to push the pins into the block until they click into place. The same screwdriver can be pressed into the slots to remove the pins if they have been inserted in the wrong locations but doing this is tricky so get them right the first time.

(6) Once those connectors are finished, separate and strip the 6-wire cable that goes to the LCD panel. Solder it to the front-panel PC board in the indicated location.

(7) At the other end, pull the wires apart until each separate strand is 20mm long. Fit each wire with a header pin, then push them into the 8-way polarised connector block as shown in Fig.11 (make sure they click into place). Note that the order the strands are inserted into the block is not the same as their order within the ribbon.

(8) There will be two free positions at the righthand end of the header for the meter power leads. Separate and strip the ribbon (red & black wires) but only tin one end. Crimp and solder that end into two header pins, then insert them into the remaining positions for the 8-way header.

(9) Strip 10mm of insulation from the other end of this cable. Do the same at one end of the Power Indicator ribbon and also for the single 5V Power strand.

(10) Take the ground strand of the Meter Power ribbon and twist it together with the ground strand of the Power Indicator ribbon. Tin them both, then do the same for all three 5V power strands.

(11) Crimp and solder both tinned junctions into header pins. Push them into the 2-way connector block, taking care to get them the right way around.

(12) Separate, strip and tin the other ends of the Power Indicator ribbon and 5V Power strand.

(13) Take cable C (120mm) and crimp it to the 16-way IDC connector using an IDC crimping tool or, in a pinch, a vice. Fig.12 shows the details. If you are using rainbow cable, then use the blue wire to indicate pin 1.

(14) Separate the strands at the other end of the cable by 12mm and strip 5mm of insulation from the ends. An automatic wire stripper will do about six at a time. Once you are finished, twist and tin the exposed strands of each wire.

(15) Solder these wires to the DIL pads on the copper side of the front-panel board (ie, at the "TO CON8" position) – see Fig.12. Pin 1 of CON8 on the main board goes to pin 1 of the DIL pads on the front-panel board (top-right as viewed from the copper side), pin 2 goes to pin 2 and so on.

The easiest way to do this is to first insert eight wires (every second one in the ribbon) into their holes down one side and solder one at either end. The other six wires on that side can then be soldered, after which the eight wires on the other side can be inserted and soldered individually (you will need tweezers or needle-nose pliers to insert them into their holes).

Table 3: Wiring Cables

From	To	Purpose	Strands	Length	Cable Set
Main Board	Front Panel	Voltage Adjust	3	200mm	A
Main Board	Front Panel	Current Adjust	3	160mm	A
Main Board	Front Panel	5V Power	1	105mm	B
Main Board	Front Panel	LED Power	2	140mm	A
Main Board	Front Panel	Misc. Signals	16	120mm	C
Main Board	Power LED	Power Indicator	2	200mm	A
Main Board	Panel Meter	Meter Power	2	160mm	A
Front Panel	Panel Meter	Meter Signals	6	120mm	B

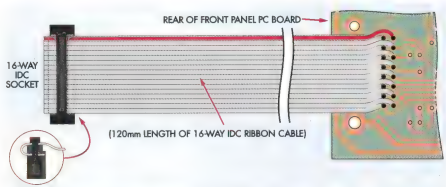

Fig.12: use this diagram to make up the 16-way ribbon cable that connects between CON8 on the main board and the 2 x 8-way pad arrangement on the front-panel board.

Finishing the front panel

If you are building the supply from a kit, the plastic front panel will probably be supplied pre-drilled and cut. It is also possible that the baseplate and/or rear panel will already be cut to size and drilled. If this is the case, skip the sections explaining how to prepare these panels.

The drilling templates for the front and rear panels can be downloaded from the SILICON CHIP website. Leave the panel meter cut-out for last. The larger rectangular cut-out is for the LED panel meter, while the smaller cut-out is for the LCD meter.

Either way, to make the cut-out, drill a 3mm hole a few millimetres inside each corner, then a row of holes between each of these corner holes. Do not let any hole go outside the outline. That done, use a cutting tool to remove the plastic between each hole, then knock out the centre piece.

LED panel meter mounting

If you are using the LED panel meter, begin by removing the two screws at the rear to detach the bezel. Be careful not to scratch the red Perspex window, which you can remove now (otherwise it will fall out).

Now carefully file the edges of the panel meter cut-out until it is a clean rectangle which the bezel posts can fit through. Avoid making the hole too large and keep it horizontal – the tighter the fit, the better.

The front-panel artwork can now be downloaded from the SILICON CHIP website. Print it out, laminate it and attach it to the front panel using double-sided tape, then cut the holes out using a sharp hobby knife.

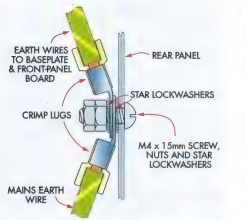

Fig.13: this diagram shows how the earth leads are secured to the rear panel. The second nut locks the first, so that the assembly cannot possibly come loose.

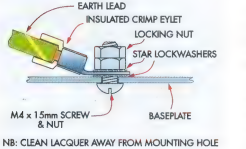

Fig.14: a similar scheme to that shown above is used to secure the earth leads to the baseplate.

Next, insert the bezel through the panel from the front and carefully place the red perspex inside it. Attach the display to the rear side using the two screws you removed earlier.

Because the front panel is relatively thin, the LED panel meter will be free to move backwards and forwards. To solve this, place the panel face-down so that the meter is pressed firmly against it, then flow a generous amount of hot melt glue around the edges, filling the gap between the plastic panel and the meter. Don't disturb the panel until it has cooled to room temperature.

This isn't a permanent attachment – you can remove the glue if you pull hard enough with a pair of pliers – but if you use enough glue it won't come loose of its own accord.

LCD panel meter mounting

Alternatively, to mount the LCD panel meter, first remove the two plastic clips on either side of the display. This is done by pulling each clip backwards until it rotates, un-hooks and detaches.

Now carefully file the edges of the panel meter cut-out until it is a clean rectangle which the rear portion of the panel can fit through. Avoid making the hole too large and be sure to keep it horizontal – the tighter the fit, the better.

Next, attach the front panel artwork as described in the previous section, then insert the panel meter through the panel from the front. That done, re-attach each side clip by latching one side on and rotating the other side into place – the opposite of the procedure used to remove it. It should click into place. You can then press it forward until it's holding the display to the panel.

If the fit isn't quite perfect and the display can still move, use some hot melt glue along the sides at the rear to secure it in place.

Completing the front panel

The next step is to mount the five binding posts on the front panel. Fig.9 and the photos indicate which colour goes where. Loosely attach them in place, then undo the nuts on the rotary and load switches (S1 & S2) on the front-panel board and remove the washers. The piece of metal under the washer on the rotary switch (used for indexing) should be left in place.

The front-panel board can now be fitted to the front panel by inserting the switches and LEDs through their corresponding holes. At the same time, the binding post terminals should fit through their corresponding holes on the board. Push the board towards the front panel until the rotary switch and load switch are flush against it. The binding post terminals should all protrude through the rear of the PC board by an equal amount.

Once it is in place, refit the nuts and washers to the switches and tighten the nuts down firmly to secure the board in place. Check that everything is nice and straight and make sure that the front panel fits properly into the slot in the case. The LEDs should project evenly through the front panel. If they don't you will have to remove it and adjust their height.

Now, temporarily unscrew the end caps of each binding post so that you can see the wire insertion holes. Rotate each binding post so that its hole is easily accessible. They should be horizontal for the V+, 0V and V- posts and vertical for the +5V and Earth posts.

Once each post has been orientated correctly, solder it to its PC board pad and use pliers to fully tighten the nuts.

Install the three knobs now. The larger knob is for the rotary switch and is secured using a grub screw. The other two knobs push on to the pot shafts but first make sure that the pointers are facing the right direction relative to the D-shaped hole at the rear. If the pointers don't face directly away from the flat portion, use a sharp knife or very thin screwdriver to prise the face off, then insert it with the correct orientation.

All that remains to complete the front-panel assembly is to install the green power LED. Push it through its hole and use a generous blob of hot melt glue at the back to prevent it from falling out. When the glue has cooled, trim its leads to about 10mm, leaving the anode lead slightly longer, then trim the 470Ω resistor leads and solder one end to the anode – see Fig.11.

Making the base plate

The baseplate is made from an alu-

Earthing The Transformer Safely

If you have lacquered the baseplate or if it is made from PC board material, you will need to separately earth the transformer frame. This means that the earth point on the baseplate will have two eyelet lugs attached to it rather than just one – see Fig.11.

First, cut an 80mm length of green/yellow mains rated wire and crimp an eyelet lug on both ends. That done, scrape the passivation layer off the transformer's frame surrounding the mounting hole nearest the earth lug. A file with a broad, flat end will do this job quickly.

The earth lugs on the baseplate should be secured in the same manner as the rear-panel earth lugs – see Fig.14. This involves using a star washer on either side of the earth lugs and two nuts so that the assembly can't come loose.

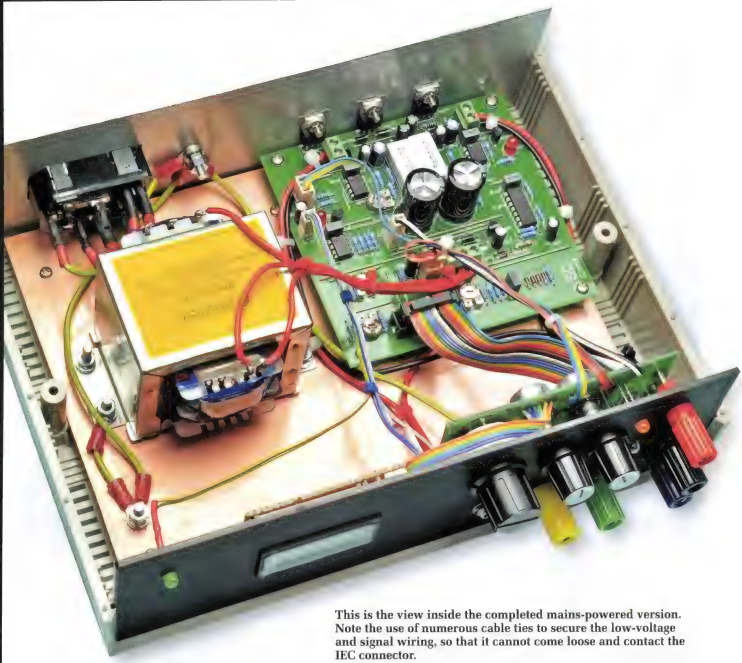

This is the view inside the completed mains-powered version. Note the use of numerous cable ties to secure the low-voltage and signal wiring, so that it cannot come loose and contact the IEC connector.

minium sheet or copper clad PC board material. Cut the sheet to 248 x 76mm using a guillotine or hacksaw, then drill holes as per the drilling diagram (available on the SILICON CHIP website).

It's a good idea to spray the baseplate with clear lacquer so that it won't oxidise (even if it's made from aluminium). If you do this, be sure to scrape away the lacquer surrounding the earth lug hole, so that the earth lug makes good electrical contact with the baseplate. You will also need to separately earth the transformer if you lacquer the baseplate – see panel.

Now check that baseplate's mounting holes line up with the plastic posts in the case. Since the cases can vary slightly in the post spacing, you may need to slightly enlarge some holes. Once it is correct, remove the 9mm tapped Nylon spacers from the main PC board and attach them to the top side of the baseplate instead, using the drilling template as a guide to their locations.

The baseplate can now be secured inside the case using six No.4 self-tapping screws. Once it's in, slide the rear panel into the case and rest the main PC board on top of its spacers. Check that, with the regulators right up against the rear panel, the PC board lines up with its spacers. If not, you will have to enlarge the baseplate mounting holes in the appropriate direction.

Note that it may also be necessary to slightly bend the regulator legs so that they sit parallel with the rear panel.

Rear panel assembly

The aluminium rear panel holds the IEC power input connector and doubles as a heatsink for the main regulators. If it's not supplied with the case, you will have to cut a sheet of aluminium to 224 x 155mm and drill it as shown in the drilling template.

Note that although the regulator mounting holes are marked on the drilling template, your regulators may be offset slightly, depending on how they've been soldered to the main board. For this reason, the best approach is to temporarily mount the main PC board in the case and slot

Our mains-powered prototype used the Altronics 3.5-digit LCD panel meter. Alternatively, the specified Jaycar LED panel meter can be used if you prefer a really bright readout.

the panel into place. The regulator tab holes can then be marked directly on the panel, rather than relying on the template.

The IEC socket outline can be marked using a scribing tool or sharp knife. Once that's done, drill a 6-7mm hole inside the outline and use a nibbling tool to complete the cut-out. The socket must ultimately be a tight fit so do this carefully, leaving a small margin inside the marked outline. A small file is then used to finish it off.

Again, it is a good idea to apply clear lacquer to the finished panel but if you do so, you must scrape it off around the earth lug mounting hole on both sides. Once the panel is ready, press the IEC socket through and it should snap into place. After that, slide the rear panel into the case and check that everything lines up.

Assuming it's OK, remove the base plate from the case and attach the transformer to it using four M4 x 15mm machine screws, spring washers and nuts. Make sure the primary wires are towards the rear of the baseplate.

It's now necessary to make up the following cables using green/yellow mains rated wire:

(1) Eyelet lug to 4.8mm fully-insulated spade lug, 90mm (IEC socket to rear panel earth point);

(2) Eyelet lug to eyelet lug, 170mm (rear panel earth point to base plate earth point);

(3) Eyelet lug to eyelet lug, 200mm (rear panel earth point to front panel binding post).

Only a ratcheting crimping tool can make safe and secure connections, so be sure to use one. Don't use a non-ratchet type as supplied with cheap automotive crimping sets – the earth connections are vital to ensure safety and a non-ratchet crimper can not be relied on.

These three earth cables are now attached to the rear panel. To do this, first insert an M4 x 15mm machine screw through the earth point on the rear panel and place an M4 star washer over the thread. Follow this with the eyelet lugs from all three cables, then place another star washer on top and install the nut.

Tighten this nut down very firmly, then fit a second nut and do this up firmly. This will securely lock the first nut into position so that the assembly can not possibly come loose – see Fig.13.

It's now just a matter of running the earth leads to their destinations as shown on the wiring diagram (Fig.11). The cable with the spade lug goes to the Earth lug of the IEC socket and must be pushed all the way on. The second cable goes to the earth point on the baseplate and is secured as shown in Fig.14. The third cable is fastened to the front-panel board, adjacent to the Earth post.

The latter is connected using an M4 x 10mm machine screw, earth lug, star washer and nut. The nut goes between the PC board and the panel itself, so use pliers to hold it in place while you tighten the screw.

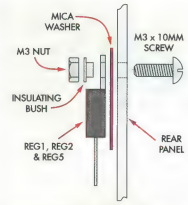

Fig.15: REG1, REG2 & REG5 must be insulated from the rear panel using a mica washer and insulating bush, as shown here.

As mentioned earlier, if there is lacquer on either panel around the earth points, it must be scraped off (on both sides) before the earth screws are installed.

The baseplate (without the main PC board) can now be reinstalled in the case, ready for the next step.

Attaching the regulators

Regulators REG1, REG2 & REG5 can now be attached the rear panel. They rely on the panel for heatsinking but must each be electrically isolated from it using TO-220 insulation kits (ie, mica washers and insulating bushes). Fig.15 shows the details.

Begin by inserting M3 x 10mm machine screws through the three regulator mounting holes in the rear panel.

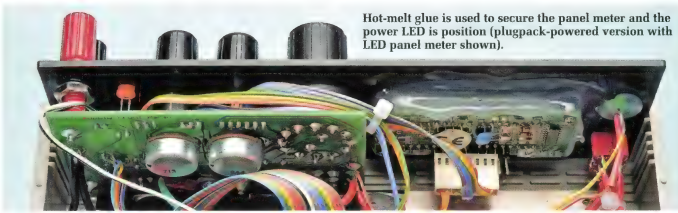

Hot-melt glue is used to secure the panel meter and the power LED is position (plugpack-powered version with LED panel meter shown).

That done, smear the three TO-220 mica washers with thermal transfer compound on both sides, then slide them over the screw shafts. The main board can now be slipped into position with the three screws passing through the regulator tabs (you will need to hold the screws heads in place while you do this).

Next, fit a plastic insulating bush to each regulator, then fit an M3 nut over the end of each screw and do it up finger tight. The main board can then be fastened to the baseplate using four M3 x 6mm machine screws, after which the three regulator screws can be tightened (hold the nuts with pliers so that they can't rotate).

Finishing the wiring

All that is left is to finish the chassis wiring as shown in Fig.11. This mainly involves the wiring to the IEC socket and the transformer secondary connections.

First, make up the short cable sections which join the incoming Active and Neutral terminals to the switch terminals on the IEC socket. These must all be mains-rated wires, correctly colour coded and fitted with 4.8mm fully-insulated spade lugs at each end. Heatshrink can be used to improve the insulation if necessary.

As before, you must use a ratcheting crimping tool to attached these fully-insulated spade connectors. Once complete, push them on hard so that they can't come loose.

Next, trim the transformer's primary leads so that they are long enough to reach the two top switch terminals, adding a little extra so that they can flex slightly. Strip the ends, scrape away the enamel, attach 4.8mm fully-insulated spade connectors and fit them to the IEC connector as shown.

The remaining leads that connect to the front panel are soldered to pads from the copper side. To do this, place the front-panel face-down and fill each remaining hole with solder. Twist the exposed conductors of the wires tightly together and tin them. It's then just a matter of re-melting the solder while pushing the tinned wire through the hole in the centre of each pad.

Once the wiring is completed, slot the front panel into the case and plug the various attached headers onto the main board – see Fig.11.

Don't forget the wires that run to screw terminal blocks CON1-CON3 on the main board. Use heavy-duty hookup wire for the transformer connections to CON1 and for the connections to CON2 & CON3. The wiring to the power LED is run using ribbon cable, as described previously.

Cable ties

As shown in Fig.11, numerous cable ties are used to secure the wiring in place. **These are necessary to ensure that if a lead does come adrift, it cannot possibly reach the back of the IEC socket and thus come into contact with the mains voltage.**

In particular, keep the lead to the 30V terminal on the transformer short and secure it as shown in Fig.11. The leads to the front panel power LED must also be bound to other cabling so that the LED's leads cannot possibly contact the IEC socket if it comes adrift (the wiring diagram is not to scale).

Similarly, the leads to CON2 & CON3 must be secured right at the terminal blocks.

You are now ready to test your new power supply.

Testing the supply

If you have built the mains-powered version, install the 500mA fuse in the IEC connector now. The fuseholder can also store a spare fuse so if you have one, it's a good idea to fit this as well.

The step-by-step test procedure is as follows:

(1) Plug a mains cord into the IEC connector and use your multimeter to check the earth connections (ie, check for continuity between the earth pin of the plug, the rear panel and the baseplate).

(2) Set the voltage and current knobs mid-way and set the rotary switch fully anti-clockwise.

(3) Switch both the load and power switches off (ie, up), then plug the unit into a 240V AC wall socket.

(4) Switch on and check that the power LED lights. The other three front panel LEDs may light briefly but should then stay off. The display should show a value in the range of 7.00-13.00V. If any of these conditions are not met after a couple of seconds, switch off immediately.

If the power LED doesn't light, check the fuse and the power LED wiring. If they look OK, it could be a problem with the main board.

Conversely, if the power LED lights but the display is not working, check the display wiring. If the display works but an incorrect value is shown, it could be a wiring or main board problem.

If one (or both) of the limit LEDs is stuck on, there could be a problem with the current limit potentiometer wiring or the main board. If the dropout LED lights, the main board probably has a fault.

(5) If all is well, turn the voltage knob up and down and check that the voltage reading changes in response.

(6) Turn the rotary switch one click to the right and check that the negative rail can also be correctly adjusted over the same range.

(7) Turn the load switch on and off and check that it has no effect on the output voltage.

Trimming the supply

Five adjustments are necessary for maximum accuracy of the readouts and current limit settings. These are best made when the supply is warm, so fit the lid and leave the supply switched on with no load for about 30 minutes (it can be trimmed cold but then readings will be less accurate once it has warmed up).

When you are ready, remove the lid and get a plastic adjustment tool or a flat-bladed screwdriver with an insulated handle. The adjustments can then be made as follows:

(1) Set the rotary switch to I+ and adjust VR3 to get a reading as close to zero as possible. Turning VR3 clockwise should increase the reading and you will need to make a series of very small adjustments to find the minimum.

If it won't go near zero no matter you do, there could be a problem with IC1 or its adjacent components.

(2) Turn the switch clockwise to I- and adjust VR4 to trim IC2 in the same manner.

(3) Connect a DMM between the V+ (red) and 0V (black) binding posts and check that the load switch is on. Turn the rotary switch anti-clockwise to V- and adjust VR5 until the reading on the display is as close to the reading on your multimeter as possible.

(4) Turn the rotary switch clockwise one step to V-, then move the positive multimeter lead to the V- (blue) binding post and adjust VR6 until the display reading matches that on the multimeter.

(5) Turn the rotary switch clockwise to V±, connect the DMM between the V+ (red) and V- (blue) binding posts and adjust VR7 until the reading on the panel meter matches that on the multimeter.

That completes the setting-up procedure. You can now install the lid and attach the two machine screws which hold it in place.

Using the supply

When using the unit, switch the display selector to either V+ or V- to adjust the output voltage. This can be done with the load switch on or off. To adjust the current limit, switch the display selector to LIMIT and turn the second knob until the desired limit current is indicated on the display.

During use, the current drawn from either output can be viewed by switching the display selector between the I+ and I- positions. If the current limit is exceeded, the corresponding Limit LED will light. Switching the display to V+ or V- will show how far the voltage has dropped to enforce the current limit.

For higher voltage outputs, select the ±V readout and adjust the voltage

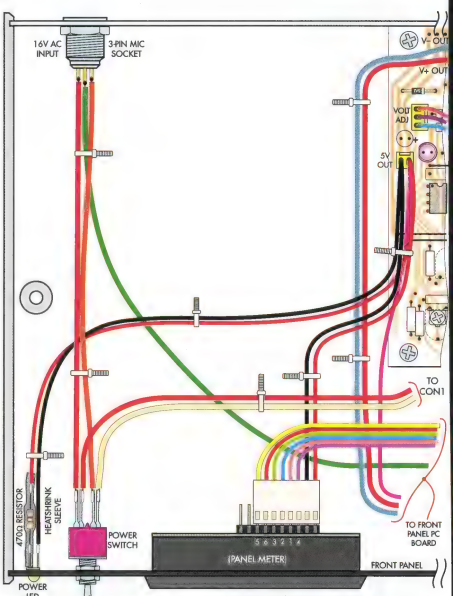

Fig.16: this version eliminates the mains wiring and power transformer by using an external 16V AC plugpack supply. It's wired as shown here.

Building The Plugpack-Powered Version

IF YOU ARE BUILDING the plugpack powered version, the PC boards can be installed into the smaller case as specified in the parts list last month. Alternatively, you can use the same case that's used for the mains-powered version.

As before, the drilling templates (ie, for the baseplate and front panel) can be downloaded in PDF format from the SILICON CHIP website. The baseplate is 190 x 60mm and the rear panel is 170 x 127mm. Note also that Altronics sell an anodised panel (H0468) to suit this case.

We have not provided a rear-panel

This internal view shows the completed plugpack-powered version of the supply. It can be built into a smaller case than the mains-powered version. The magnified inset shows the ribbon cable connection to the front-panel board.

drilling template as you simply mark and drill holes for the three regulator tabs, plus a 16mm hole at the other end to take a 3-pin microphone socket. This socket accepts a matching connector from the external plugpack supply.

For the larger case, you can use the same drilling templates as for the mains-powered version with just a few changes:

(1) Do not drill the transformer mounting holes or the earth lug hole in the baseplate.

(2) Instead of making the IEC socket cut-out on the rear panel, drill a 16mm hole for the microphone socket.

(3) Drill the power LED hole in the front panel 15mm higher than indicated.

(4) Drill a 6.5mm hole 30mm below the power LED for the power switch

In either case, install the microphone socket and follow Fig.16 to wire up the power supply.

Once this wiring is complete, all that remains is to solder the 3-pin microphone plug to the plugpack lead. To do this, first shorten the bare wires from the plugpack so that they project 15mm from the sheath. Strip 5mm from each end and tin them.

Next, remove the screw holding the microphone plug together, along with the two screws that hold the metal clamp at the rear of the plug. The lead can then be fed through the rear of the plug and the wires soldered to the appropriate tabs on the connector. Make sure that the earth (green/yellow) wire goes to the pin nearest the U-shaped depression running along the plug body. The other two wires can go to either tab, since it is an AC plugpack.

Finally, reassemble the plug and the job is done.

control as required. The load should be connected between the V+ (red) and V- (blue) terminals. The current limit will operate as normal, although only one current limit LED may light due to slight differences in the op amps or the current sense trimming.

If more current is drawn from the output than is available at the set voltage (see the load graphs published last month), the red dropout LED will light. This indicates that the output voltage is fluctuating. To resume proper regulation, reduce the voltage and/or current until the LED goes out.

The dropout LED can also light if the load impedance varies extremely rapidly. **SC**

SILICON CHIP REFERENCE BOOKSHOP

PIC IN PRACTICE by D W Smith.

2nd Edition - published 2006

Based on popular short courses on the PIC, for professionals, students and teachers. Can be used at a variety of levels. An ideal introduction to the world of microcontrollers. 255 pages in paperback.

$65

PIC MICROCONTROLLERS: know it all Multiple authors

The best of subjects Newnes authors have written over the past few years, combined in a one-stop maxi reference. Covers introduction to PICs and their programming in Assembly, PICBASIC, MBASIC & C. More than 900 pages paperback.

$90

PIC MICROCONTROLLER –YOUR PERSONAL INTRODUCTORY COURSE

By John Morton 3rd edition 2005.

A unique and practical guide to getting up and running with the PIC. It assumes no knowledge of microcontrollers – ideal introduction for students, teachers, technicians and electronics enthusiasts. Revised 3rd edition focuses entirely on re-programmable flash PICs such as 16F54, 16F84 12F508 and 12F675. 226 pages in paperback.

$60

USING UBUNTU LINUX

by J Rolfe & A Edney – published 2007

Ubuntu Linux is a free and easy-to-use operating system, a viable alternative to Windows and Mac OS. Introduces Ubuntu, tells how to set it up, covers the various Open Office applications and gives troubleshooting hints and tips. Highly recommended.

222 pages in paperback

$27

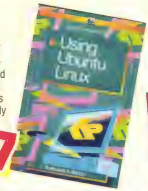

PROGRAMMING 16-bit MICROCONTROLLERS IN C By Luci di Jasio (2007)

Subtitled Learning to Fly the PIC 24, a Microchip insider tells all on the newest, most powerful PICs ever! Condenses typical introductory "fluff" focusing instead on examples and exercises that show how to solve common, real-world design problems quickly. Includes handy checklists.

FREE CD-ROM includes source code in C, the Microchip C30 compiler, and MPLAB SIM. 400 pages paperback.

CD-ROM included!

$90

SOLAR SUCCESS – Getting it right every time by Collyn Rivers. 1st edition

The complete guide to home and property systems. Covers the ramifications of lighting, fridges and freezers, air conditioning, washing machines and driers and much more on solar systems; also covers solar basics and how to conduct an energy audit. As reviewed in Silicon Chip November 2008. 112 pages.

$47.50

SOLAR THAT REALLY WORKS – Motorhomes 5th Wheelers, Campervans, Cabins

by Collyn Rivers. 2nd edition

All the information you need for successful solar installation in mobiles.An expert on getting the most out of solar systems, Collyn-Rivers dispels many of the myths and helps you get it right when there is no mains power available.

As reviewed in Silicon Chip November 2008. 82 pages.

$42.50

TV ACROSS AUSTRALIA

Edited by Kaz Bielecki – 4th Edition 2007

Essential information for anyone travelling Australia, or just wanting to know the channels, polarity and location of all television transmitters and translators from coast to coast. Plus coverage maps, tv transmitter data . . . everything you need to know in the one place for the first time!

$49.95

PRACTICAL GUIDE TO SATELLITE TV

By Garry Cratt – Latest (7th) Edition 2008

Written in Australia, for Australian conditions by one of Australia's foremost satellite TV experts. If there is anything you wanted to know about setting up a satellite TV system, (including what you can't do!) it's sure to be covered in this 176-page paperback book.

$49

NEWNES GUIDE TO TELEVISION & VIDEO TECHNOLOGY

By KF Ibrahim 4th Edition (Published 2007)

It's back! Now in a new edition provides a full and comprehensive coverage of video and television technology including HDTV and DVD. Starts with fundamentals so is ideal for students but covers in-depth technologies such as blu-ray, DLP, Digital TV, etc so is also perfect for engineers. 600+ pages in paperback

$70

RF CIRCUIT DESIGN

by Chris Bowick, Second Edition, 2008.

A new edition of the classic RF circuit design book. RF circuit design is now more important that ever in the wireless world in which we live. In most of the wireless devices that we use there is an RF component – this book tells how to design and integrate in a very practical fashion. 244 pages in paperback.

$75

OP AMPS FOR EVERYONE

NEW 3RD EDITION! NEW LOWER PRICE!

By Carter & Mancini. Substantially updates coverage for low-speed and high-speed applications, and provides step-by-step walk-throughs for design and selection of op amps. Huge 648 pages!

$120

HANDS-ON ZIGBEE

By Fred Eady, Published 2007

We asked our Zigbee guru, Telelink's Jack Chomley, to comment on this book and he said a lot of it is pretty in-depth but, if you want to learn all about Zigbee you'd go a long way to find a better reference than this one. 336 pages in paperback.

$96.50

10% OFF!

WANT TO SAVE 10%? SILICON CHIP (PRINT EDITION) SUBSCRIBERS* AUTOMATICALLY QUALIFY FOR A 10% DISCOUNT ON ALL BOOK PURCHASES!

(*Does not apply to website orders)

See the handy order form on P39 of this issue!

$19.80

SILICON CHIP'S PERFORMANCE ELECTRONICS FOR CARS Published 2004

If you ever wanted top performance from your car, this is the book you need. 160 pages of technical background to give you a thorough understanding then 16 specialised projects to build to make your car really perform, including engine modifiers and controllers, instruments and switches.

AC MACHINES

By Jim Lowe Published 2006

Applicable to Australian trades-level courses including NE10 AC Machines, NE12 Synchronous Machines and the AC part of NE30 Electric Motor Control and Protection.
Covering polyphase induction motors, single-phase motors, synchronous machines and polyphase motor starting. 160 pages in paperback.

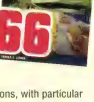

$66

$95

DVD PLAYERS AND DRIVES

by K.F. Ibrahim. Published 2003.

A guide on DVD technolo gy and applications, with particular focus on design issues and pitfalls, maintenance and repair.
Ideal for engineers, technicians, students of consumer electronics and sales and installation staff. 319 pages in paperback.
As reviewed in SILICON CHIP February 2004.

$60

ELECTRIC MOTORS AND DRIVES

by Austin Hughes - Third edition 2006

Brand new edition of this amazingly popular book. Intended for non-specialist users of electric motors and drives, filling the gap between academic texts and general "hand-books". Explores all of the widely-used modern types of motor and drive including conventional & brushless DC, induction motors, steppers, servos, synchronous and reluctance. 384 pages, soft cover

$105

PRACTICAL VARIABLE SPEED DRIVES AND POWER ELECTRONICS

by Malcolm Barnes. 1st Ed, Feb 2003.

An essential reference for engineers and anyone who wishes to design or use variable speed drives for induction motors. As reviewed in SILICON CHIP September 2003. 288 pages.

$115

SWITCHING POWER SUPPLIES A to Z

by Sanjaya Maniktala. Published 2006.

Theoretical and practical aspects of controlling and measuring electromagnetic interference in switching power supplies. Includes flow-charts for building DC-DC converters and their magnetic compo-nents under typical wide-input supply conditions. 503 pages in hard cover.

CD-ROM included.

$62

RADIO, TV AND HOBBIES April 1939 to March 1965

– Every article to enjoy once again on DVD-ROM!

This remarkable archival collection spans nearly three decades of Australia's own "Radio and Hobbies"/"Radio TV and Hobbies". Every article has been scanned into PDF format – ready to read at your leisure on your computer (obviously, a computer DVD-ROM reader is required along with Acrobat Reader 6 or later). For history buffs, it's worth its weight in gold. For vintage radio enthusiasts, what could be better? For anyone interested in electronics, this is one which you *MUST* have in your collection! **NB: Does not play on audio DVD players.**

$12.95

SILICON CHIP'S ELECTRONIC PROJECTS FOR CARS VOL 2 Pub. 2003 - SAVE $10.00!!!

Even though it's seven years old, there's a wealth of information in this 128-page softcover book for anyone who wants to build car projects: everything from electronic ignition systems to digital techno, headlight reminders and car alarms, a subwoofer and even an an alcohol breath tester.
BE QUICK! LAST FEW shop soiled copies left – *while they last* – ONLY $2.95 ea! (+p&p)

$130

AUDIO POWER AMPLIFIER DESIGN HANDBOOK

by Douglas Self **NEW 5th Edition 2009**

The latest edition of "the Bible" on audio power amplifiers. Many revisions and updates to the previous edition and now has an extra three chapters covering Class XD, Power Amp Input Systems and Input Processing and Auxiliarly Subsystems. Not cheap and not a book for the beginner but if you want the best in Audio Power Amps, you want this one! – 463 pages in paperback.

NEW NEW NEW NEW

$90

SELF ON AUDIO

by Douglas Self 2nd Edition 2006

A collection of 35 classic magazine articles offering a de-pendable methodology for designing audio power amplifiers in a way that improves performance at every point without significantly increasing cost. Includes compressors/limit-ers, hybrid bipolar/FET amps, electronic switching and more. 474 pages in paperback.

$90

PRACTICAL RF HANDBOOK

by Ian Hickman. 4th edition 2006

The latest guide to RF design for engineers, technicians, students and enthusiasts. Covers key topics in RF: analog design principles, transmission lines, couplers, trans-formers, amplifiers, oscillators, modulation, transmitters and receivers, propagation & antennas. 279 pages in paperback.

$47.95

NEW NEW NEW NEW

BUILD YOUR OWN ELECTRIC MOTORCYCLE

by Carl Vogel. Published 2009.

Alternative fuel expert Carl Vogel gives you a hands-on guide with the latest technical information and easy-to-follow instructions for building a two-wheeled electric vehicle – from a streamlined scooter to a full-sized motorcycle. 384 pages in soft cover.

$62

THE AMATEUR SCIENTIST CD

Brand new V4.

Many thousands of copies now sold. An incredible CD containing over 1000 classic projects, sourced from Scientific American over the past 73 years – covering every field of science. Very latest edition, just out. Suits ages 12 to adult and runs with any browser (on Win2000 or later). Recommended by the US National Science Teachers Assn.

NOTE: ALL PRICES ARE PLUS P&P – *AUSTRALIA ONLY: $10.00 per order;* *NZ – $12.00 PER BOOK;* *REST OF WORLD $18.00 PER BOOK*

To Place Your Order:	eMAIL (24/7)	OR	FAX (24/7)	OR	PAYPAL (24/7)	OR	PHONE - (9-5, Mon-Fri)	OR	MAIL
	silicon@siliconchip.com.au with order & credit card details		Your order and card details to (02) 9939 2648 with all details		Use your PayPal account silicon@siliconchip.com.au		Call (02) 9939 3295 with your credit card details		Your order to PO Box 139 Collaroy NSW 2097

Or use the handy order form on P39 of this issue

*ALL TITLES SUBJECT TO AVAILABILITY. PRICES VALID FOR MONTH OF MAGAZINE ISSUE ONLY. ALL PRICES INCLUDE GST

Vintage Radio

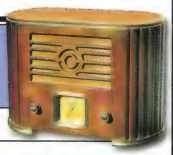

By RODNEY CHAMPNESS, VK3UG

Reflex receivers – why they were necessary

Above: the Kriesler 11-41 was a popular 4-valve reflex receiver from the 1950s.

Valves were expensive in the early days of radio and so designers came up with clever techniques to minimise the valve count. One technique was known as "reflexing" and involved using the same valve to work as both an RF or IF amplifier and as an audio amplifier.

COMPONENTS such as tuning capacitors, inductors (both fixed and variable), resistors and fixed capacitors were in common use during the Spark Era, at the start of last century. However, valves (when they finally made an appearance) were initially extremely expensive and fragile. Suffice to say, they didn't have a long life.

Initially, obtaining a high vacuum inside a valve was quite difficult and most of the early valves were of the "soft" variety. This meant that they had a small amount of gas left inside, due to manufacturing limitations. As a result, these valves were rather variable in their performance, even between supposedly identical types.

Another problem that had to be overcome was how to maintain a good vacuum. This could only be achieved if the glass and metal leads through the glass envelope had the same coefficient of expansion. If the coefficient was different, air would eventually leak into the valve and it would become gassy. Occasionally, even today, a valve with a purple glow inside it will be seen and this is often an indication that the glass to metal pin seal is not perfect and air has leaked into the valve.

Incandescent light globes were the first items to have metal pins or wires protruding through a glass envelope. However, this created no real problem, since the vacuum created was satisfactory for their operation and the glass-to-metal seals were not as critical. In some cases, the globe was filled with an inert gas such as nitrogen to prevent evaporation of the filament.

One problem with valves was that the metals used inside them (ie, for the elements and filaments) had to be carefully selected, otherwise they could emit gases when they became hot. These gases could then "poison" a valve and adversely affect its performance.

So early attempts at making valves into viable amplifying devices encountered many difficulties. However, their potential to revolutionise radio was obvious and so a great deal of effort was put into solving these problems.

It is for these and other reasons that valves were by far the most expensive and fragile components in early valve receivers. As a result, the engineers and experimenters of that era searched for ways in which each valve could be made to do more than one job, to minimise cost.

Reflexing

One of the first to achieve dual usage of valves was W. H. Priess, a US Navy worker who patented the principle of reflexing during WWI. This technique involves passing a

signal through the same amplifier twice, at two significantly different frequencies – usually once at a radio or intermediate frequency (ie, RF or IF) and then at audio frequency (ie, after the modulated signal from the IF stage has been detected).

Initially, there was little interest in reflexing for a couple of reasons. First, it was no doubt kept a military secret during the war and so was not widely known during those years. Second, the principle, although sound, initially proved tricky to implement. However, valves were still very expensive in the 1920s and this led some manufacturers and enthusiastic experimenters to refine the technique and this eventually yielded good results

In theory, reflexing meant that one valve did the job of two. However, as there was always some compromise in the operating conditions of the valves for each different frequency, the actual improvement was always somewhat less that this.

Reflexing was used for only a relatively short time overseas but in Australia, it was still being used in some receivers as late as the early 1950s. It was initially used in high-end receivers in the early 1930s, then in receivers at the bottom end of the market to reduce valve count (and thus cost).

This is not to say that reflex receivers performed poorly because they were aimed at the bottom end of the market. Some sets did leave something to be desired but others were very good receivers.

How reflexing works

The mere thought of restoring a radio receiver with a reflex stage has sent cold shivers down the backs of many enthusiasts. As a result, such sets have either been shunned or used simply as non-working show items.

I must confess that during my early days as a serviceman I wasn't all that keen on dealing with reflex sets. There were just so many wires and components going here, there and everywhere and a real mix of signal leads. However, most of the reluctance to service reflex sets (as with AGC stages) was due to the fact that servicemen lacked the test equipment that we have today.

Originally, reflexed stages were included in tuned radio frequency (TRF) receivers. These sets typically had an RF stage followed by a detector. The audio output from the detector was then fed back to the input of the RF amplifier valve. From there, the resulting amplified audio signal was typically applied to an audio output stage.

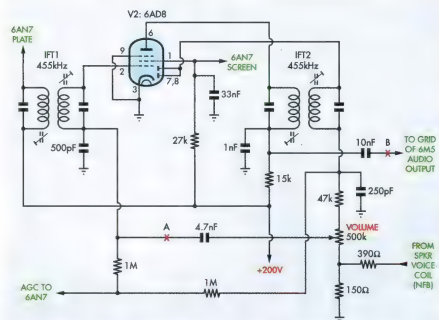

Fig.1: the IF (intermediate frequency) amplifier, detector and reflexed audio stage of the Kriesler 11-41 & 11-49 radio receivers. The detected audio signal at pins 7 & 8 of the 6AD8 are fed back to the grid via the primary of IFT2, a 47kΩ resistor, the volume control, a 4.7nF capacitor and the secondary of IFT1.

In a well-designed receiver, this system could be made to work quite well. However, most of these early TRF sets were built breadboard style, so layout could be (and usually was) quite critical. Unfortunately, due to incorrect wiring techniques and the inevitable stability problems that followed, many people soon came to the conclusion that reflex circuits were "cranky" and best left alone.

That wasn't to be the end of reflex receivers, however. When superhet receivers were subsequently developed in the 1930s, the breadboard style of construction was quickly abandoned. Instead, the parts were mounted on a metal chassis, with the critical components shielded. This was necessary to ensure stability and consistent performance and this style of construction quickly became the standard technique for Australian manufacturers.

As a result, some manufacturers decided to see if more stable high-performance reflex receivers could be developed using metal chassis and improved shielding. Their efforts proved successful and an early example is the Radiolette model 31/32.

There were others, as I quickly discovered when I looked through the 1938 edition of the Australian Official Radio Service Manual (AORSM). There were at least eight mainstream manufacturers that had at least one reflex model: Aristocrat, Astor, Croyden, HMV, Hotpoint-Bandmaster, National, Fisk-Radiola and Westinghouse. In fact, Fisk-Radiola and its badged stablemate Hotpoint-Bandmaster lead the way with quite a few models, both mains and battery operated.

Kriesler 11-41/11-49 receiver

The final volume of the AORSM has no manufacturers with reflex receivers. In fact, the last reflex receiver featured in the AORSM is the Kriesler 11-41/11-49 (in Volume 12, 1953), so Kriesler appears to be the last manufacturer of these sets in Australia.

The Kriesler 11-41 & 11-49 were 4-valve mains-operated mantel receivers, the two models being almost identical. So let's take a closer look at the circuit to see how reflexing worked.

Fig.1 shows the IF (intermediate frequency) amplifier, detector and reflexed audio circuitry stages of these models. The front-end uses a 6AN7 converter valve and this feeds a signal

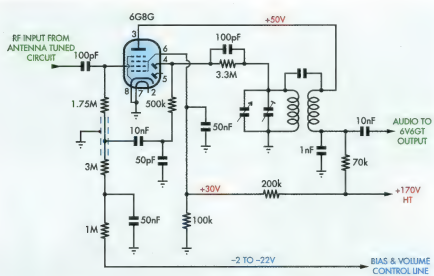

Fig.2: the reflexed circuitry in the Astor GR (Football) TRF receiver. In this circuit, the detected signal on pin 4 of the 6G8G is fed back to the grid via a 500kΩ resistor, a 10nF capacitor and a 1.75MΩ resistor. A variable bias (-2V to -22V) line controls the volume (the lower the bias, the greater the gain).

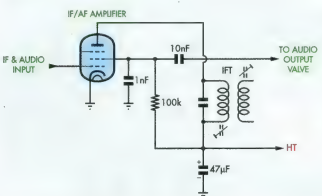

Fig.3: in this circuit, the screen of the IF/AF amplifier is used as the plate for the reflex stage audio output. This gives a gain of about 10-20, depending on the valve.

centred on 455kHz to an IF amplifier stage (V2, 6AD8).

In greater detail, the signal from the converter is fed through a double-tuned first IF transformer (IFT1) to the grid of a 6AD8 IF amplifier. The signal is then amplified and applied to another double-tuned IF transformer (IFT2). The output from this transformer is then fed to the 6AD8's detector and AGC diodes which are tied together at pins 7 & 8. A 47kΩ resistor, 500kΩ potentiometer (volume) and 150Ω resistor form the load for these diodes.

The resulting audio signal is taken from the wiper of the volume control and applied via a 4.7nF capacitor to the top of a 500pF capacitor (which acts as an RF bypass for the first IF transformer). IFT1's secondary winding has virtually no effect on the audio signal which is now fed directly to the grid of the IF amplifier.

As a result, the 6AD8 amplifies the audio signal along with the IF signal and the amplified signals appear at the plate. IFT2's primary has little effect on the audio signal which is now developed across a 15kΩ plate load resistor.

The 1nF capacitor at the bottom of the primary winding acts as an RF bypass. It's effective at IF frequencies but its impedance at the higher audio frequencies is around 50kΩ. However, this does shunt the 15kΩ plate load resistor to some extent, which reduces the audio performance at higher frequencies.

The amplified audio signal across the 15kΩ resistor is fed via a 10nF capacitor and a 47kΩ stopper resistor (not shown) to the grid of a 6M5 audio output valve which then drives the loudspeaker via a transformer. The 390Ω resistor (bottom, right of Fig.1) provides negative feedback from the speaker's voice coil to the bottom of the volume control, to improve audio quality.

Full AGC

It's not all that common to see the full AGC voltage applied to a reflexed IF/audio stage but Kriesler has done this here. In this circuit, AGC is taken from the top of the 47kΩ resistor (at the top of the volume control) and applied via two 1MΩ resistors to the grid of the 6AD8 reflex stage. Because its plate load resistor is only 15kΩ, the 6AD8 does not have high audio gain – only about 10-12 times.

As a result, the IF amplifier conditions are not far from normal and the stage is not likely to overload on strong signals. By contrast, Astor reflex receivers often used a 70kΩ plate load resistor in the reflex stage.

Because AGC is applied to the reflex stage, its gain at both IF and audio frequencies is reduced with increased AGC control voltage. If not done correctly, this can mean that the actual audio output from the set can be reduced with increasing signal (as mentioned in a previous column on AGC).

Fortunately, Kriesler got it right in this set. There is no reduction in volume when tuning a strong station, as compared to that from a weak station.

By the way, it is quite easy to compare the performance of a reflex set with a more conventional circuit without reflexing. In Fig.1, there are two points marked "A" and "B". If the "A" end of the 4.7nF capacitor is lifted and connected to "B" and the 10nF capacitor is removed (ie, the wiper of the volume control now feeds the audio signal directly to the 6M5 audio output stage via the 4.7nF capacitor), then the set reverts to non-reflexed operation.

Of course, the audio gain will be down as there is now only one audio stage in the receiver rather than two when it is wired as a reflex set.

As a result, when this is done, the variation in the audio level is quite noticeable, particularly if the received signal is relatively weak. However, if the signal is strong, there is not a great deal of difference due to the fact that the audio output from the reflexed stage was reduced, due to the AGC affecting the audio gain.

Astor GR 3-valve TRF receiver

Manufactured from around 1948,

the Astor GR (Football) is a simple little TRF receiver (see May 2009 for a full description). As with the Kriesler 11-41/11-49, it is also a reflex design but the circuit configuration is simpler.

Fig.2 shows details. In this circuit, the RF signal from the tuned antenna circuit is fed to the grid (top cap) of a 6G8G RF stage via a 100pF capacitor. The amplified RF signal appears on the plate (pin 3) and is fed to the primary of the RF tuned coil assembly. The signal on the tuned secondary is then applied via a parallel 100pF capacitor and a 3.3MΩ resistor to the 6G8G's detector diode (pin 4).

From there, the detected signal is fed via a 500kΩ resistor, a 10nF capacitor and a 1.75MΩ resistor to the grid of the 6G8G, so that amplification now takes place at audio frequencies. The 50pF capacitor at the bottom of the 500kΩ resistor bypasses any RF signals at this point, while the series-connected 3MΩ and 1MΩ resistors go to a bias and volume control line. This line applies a manually-controlled negative voltage of between -2V and -22V to the grid of the valve.

The 6G8G is a variable-mu valve and the lower the bias the greater the gain (and thus the greater the volume).

The resulting amplified audio appears at the 6G8G's plate and is fed through the primary of the RF coil assembly to a 70kΩ audio load resistor. A 1nF capacitor bypasses any RF signals that may be present, while the audio is fed to the grid of the 6V6GT audio output valve via a 10nF capacitor.

As mentioned, the 70kΩ plate load resistor used in this set is much greater than the 15kΩ resistor used in the Kriesler, although overload does not appear to be a problem. Both sets adequately filter any residual RF/IF signals following the detector, to prevent them being fed back to the RF stage. This is vital to ensure stability.

Screen reflexing

Most reflex stages, such as the two examples given, use plate circuit reflexing. However, it's also possible to use the screen as the plate for the reflex stage audio output. This usually involves using the IF amplifier as the reflex stage.

Fig.3 shows a typical circuit. In this case, the plate circuit of the reflexed IF amplifier is the same as for a conventional IF amplifier. The screen, however, is bypassed at intermediate frequencies using a 1nF capacitor, while the usual bypass capacitor of around 10nF now couples the audio to the grid of the audio output valve.

Nicknamed the "Football" because of its cabinet shape, the Astor GR was a simple 3-valve TRF receiver with a reflexed RF/audio stage (see Fig.2). It was manufactured from around 1948.

The audio gain using the screen as the plate will be between about 10 and 20 times, depending on the valve used.

Servicing reflex receivers

Reflex receivers do not usually present any more servicing problems than "non-reflexed" sets, nor are they any more difficult to restore. However, because they work at both RF and audio frequencies, it is necessary to ensure that the component values around the reflex stage are correct, ie, all resistors within tolerance, capacitors not leaky and the valves in good condition.

It's also important to remember that relatively few valves are suitable for use in reflex stages. The 6G8G, 6AR-7GT, 6BA6 and 6AD8 are valves that work well and although substitutes may work, they will usually not be trouble-free. For example, the 6AD8 in the Kriesler 11-41/11-49 cannot be replaced with a 6N8 although it appears to have reasonably similar characteristics, the exception being the grid cut-off voltage. It could probably be made to work quite well with a few changes to component values, however.

One feature of reflex sets that can annoy some people is the "minimum volume effect". The problem here is that when the volume control is turned right down, there is still some audio output from the loudspeaker. The Kriesler 11-41/11-49 suffers from this problem, which is exacerbated by the 150Ω resistor in series with the "earthy" end of the volume control.

However, although some people might think that this is a problem, most would not even notice. After all, it's only rarely (if ever) that the sound would be turned right down.

By contrast, the Astor GR doesn't suffer from this problem, as the bias can be increased to such a level that no signal gets through the 6G8G valve. In fact, this is a very trouble-free little circuit.

Was it necessary in later sets?

As previously mentioned, reflexing was used in the early days to keep costs down. However, as time progressed and valve prices fell, reflexing was no longer really necessary. Without reflexing, circuit layout and design were not as critical and that suited many manufacturers whose design skills were often lacking.

By contrast, in sets with reflex stages, considerable attention to the circuit design and layout was necessary if the set was to work well.

Most manufacturers were slow

The Astor KM (or Astor Mickey) was a 4-valve reflex receiver from the late 1940s. Its reflexed IF/audio stage is similar (but not identical) to that in the Astor GR and it had the following valve line-up: 6A8G converter, 6B8G IF/audio reflex stage, 6V6GT audio output stage and 5Y3GT rectifier.

to take advantage of multi-purpose valves. For example, the 6F7 and its 6P7G octal equivalent weren't popular, despite the fact that they contained two valves in the one envelope which could be used for a number of different purposes.

One of the first triode-pentode valves used in receiver audio stages was the 6AB8, as in the 1953 Tasma 1601. This produced a receiver with similar performance to the Kriesler 11-41/11-49, despite the fact that the Tasma 1601 lacked a reflex stage.

Not long afterwards, the ubiquitous 6BM8 came into use and there was no longer any need for reflexing. The last Kriesler valve receiver, the 11-99, used a 6AN7 (converter), 6N8 (IF amplifier, detector and AGC) and a 6GV8 combined triode and pentode output stage. This was a relatively simple high-performance receiver using just three valves (the rectifier was a single silicon power diode in a half-wave circuit).

It's fair to say that reflex sets were still being produced long after their early advantages had been negated by falling valve costs. Improvements in other aspects of receiver design also eventually helped bring about the end of reflexing.

Certainly, there is no advantage in modern domestic radios using reflex circuits. Transistors are cheap and adding one or two transistors to a circuit contributes little to the cost of a receiver.

Summary

Reflex circuits filled a niche in the early days of radio when components, particularly valves, were quite expensive. Their advantages were lower costs, lower power consumption (an important factor in battery and vibrator sets), less heat in cabinets and smaller valve inventories for servicemen.

On the other hand, they required more careful design, were not as easy to fault-find if test equipment was scarce and were not as tolerant of components (including valves) which drifted out of tolerance. If you want to learn more about reflex receivers, take a look at the chapter on reflex principles in the "Radiotron Designers' Handbook".

Finally, reflex receivers are well worth having in a restorer's collection. The Astor GR "Football" is a good example of a receiver that brings quite high prices. SC

Photo Gallery: Neumann KM54 Cardioid Condenser Microphone

USED FROM THE LATE 1950s and right through the 1960s, this microphone included a tiny AC701 valve. Its specifications would easily match most studio microphones in use today – 0.6% distortion from 40Hz to 15,000Hz and 110dB maximum sound pressure. A matching power supply provided 4V DC at 100mA for the valve filament and 120V at 0.5mA for the plate. The filament supply was heavily filtered to ensure low noise. Photograph by Kevin Poulter for the Historical Radio Society of Australia (HRSA). Phone (03) 9539 1117. **www.hrsa.net.au**

ASK SILICON CHIP

Got a technical problem? Can't understand a piece of jargon or some technical principle? Drop us a line and we'll answer your question. Write to: Ask Silicon Chip, PO Box 139, Collaroy Beach, NSW 2097 or send an email to silicon@siliconchip.com.au

OBDII interpreter for pre-2006 Commodores

I have just completed building the OBDII Interpreter, as designed by John Clarke (SILICON CHIP, February 2010). So far I have not had the opportunity to test it to any great extent.

My present main use hopefully will be to use it with pre-2006 Holden Commodores with their Assembly Line Diagnostic Link (ALDL) protocol. Several of the later models use the common 16-pin OBD connector although the data access is by pin 9, easily linked across to pin 10.

My study of the circuitry in conjunction with info from various web sites would indicate to me that pin 10 is the negative line j1850 of the VPW (in) protocol and may be suitable, perhaps with some modification, for the reception of data from the Commodore VN, VS, VT etc models prior to 2006. Apparently this data requires inversion and translation to RS232 levels with the MAX232. All this is catered for in your design. Software is available from several sites I am informed, together with some fairly basic circuitry.

However, with Mr Clarke's extensive knowledge and experience in this field, would it not be possible to extend the uses of this project to include advice on using it with the very large number of Holden models that have the ALDL diagnostic system?

I have read and enjoyed many articles over several years in "Electronic Projects for Cars" and "Performance Electronics for Cars", etc and have learnt much about modern car electronics to add to my knowledge base. I have no doubt that additional information would enable further use of the OBDII Interpreter to cater for any car which uses an ECU to control functions and diagnose fault conditions. All we need is the ability to connect and translate as required. (T. C., Bendigo, Vic).

● The OBDII Interpreter was designed specifically for the OBDII protocol used on 2006 and later vehicles.

Before 2006, there was a huge range of on-board diagnostics techniques on cars and virtually a different format for each vehicle manufacturer and model. The Holdens did use the ALDL protocol and we did direct readers to a website for this in the general OBDII article published in the same issue (February 2010).

The problem with describing a project for pre-OBDII cars is that there are so many variations in the protocols used at that time that while it may operate on one model it is unlikely to work on another.

Frequency switch for turbocharger

I have a query regarding the Frequency Switch kit (SILICON CHIP, June 2007).

I am attempting to use the unit as an ignition cut rev limiter for a race car (with future use for launch control planned by way of a second Frequency Switch kit). I would like to be able to make the hysteresis "lower" so it cuts on and off very quickly, to help spool up a turbocharger.

Can I replace trimpot VR3 with a fixed resistor or just hard-wire that connection to reduce the hysteresis wait time? If so, what value should I use?

I have attempted to get my head around the LM2917 data sheet and understand exactly how this part of the circuit works but unfortunately I am unable to fully grasp the concept. (C. W., Warrnambool, Vic).

● The hysteresis is decreased by making VR3 larger. We suggest replacing VR3 with a 100kΩ resistor, ie, make it a fixed resistor of 100kΩ.

DAB+ Digital Set-Top Box: Add-On For AM/FM Radios

I am writing to ask whether the hardware etc might be available for the production of a "DAB+ digital set-top box" for the reception of DAB+ digital radio on existing AM/FM receivers? Before you discount this out of hand, may I sketch out how I see such a STB working.

The box would contain a digital receiver/tuner and scanning circuit to "load" and store the digital channels. However, instead of the cable link that is used between an HD or SD digital STB for TV reception (ie DVB+), the box would include a short-range transmitter than could be user-tuned to a specific unused AM or FM channel, the AM or FM band also being user selectable, so that all of the radios in the household, within say 10m of the DAB+ STB can tune into the currently selected channel. Channel selection could be via a remote control but with buttons of the box that can also be used to perform the same functions.

Obviously this project wouldn't be suitable for use in a car or other motor vehicle but would allow a household that can't afford to replace all of their existing radios to still listen to digital – so long as everyone can agree on the same station or they construct multiple DAB+ STBs with different output frequencies set. (P. M., Karabar, NSW).

● What you suggest is probably feasible but we cannot see very many people being interested since most DAB+ programs are originated as AM or FM transmissions which can be received perfectly well and with arguably better quality (in the case of FM programs) on standard AM/FM radios. More to the point, it will be many years, if ever, before FM and particularly AM transmissions are phased out.

Can iTunes Play Via The DAC?

I am quite interested in building the High-Quality Stereo DAC (SILICON CHIP, September, October & November 2009). My application would be to replay music files from a PC.

The articles mention that a PC can be connected but I just wanted to be sure. The DAC has coaxial and TOSLINK inputs so I assume that pins 2 & 3 (D+, D-) on the USB connector would be wired to an RCA connector and then to the coaxial connector on the DAC.

Also, I use iTunes to store my music in either AAC+ or FLAC format. Would the DAC be able to handle these? Another application could be replay from an iPod but I'm not sure if this is possible. I assume that there is a digital out connection somewhere on the Apple connector that could be used? (D. B., via email).

● Some computers have built-in TOSLINK or S/PDIF outputs so if yours does, you can just hook it up directly. Otherwise, you need either a USB or PCI adapter. Here is one example:

http://www.virtual-village.com.au/usb-mini-converter-to-spdif-output-008415-011.html

Here is a another cheaper option:

http://www.dealextreme.com/details.dx/sku.15745

The last one requires special drivers though, which might mean you have to fiddle with it more to get it to work.

As for your second question, iTunes should work fine. Your computer will convert the audio to PCM before sending it out over a USB to S/PDIF adaptor. It is possible to play Ogg Vorbis and FLAC files, among others, via the DAC and it works fine via an on-board sound card with digital output.

We have also tested a portable music player (an iRiver) which has a TOSLINK output and it works fine via the DAC. We don't know about iPODs; if they have a digital output adaptor then they will work.

Alternatively, removing VR3 will give minimal hysteresis.

Lightning protection for buildings

I am considering building a large shed on a country property, to house all my machinery. However, the area is notorious for lightning strikes and I am concerned about the risk to the building, especially as I will have some electronic gear inside, as well as a big TV set.

TV sets seem to be frequent casualties in thunderstorms. What do you suggest? (R. B., Liverpool, NSW).

● There is really only one foolproof way to protect against damage from lightning and that is to put up a well-grounded lightning arrestor that is tall enough so that the building you want to protect is under the 60° "cone of protection". However the paradox is that by putting up a tall lightning arrestor, you may well get more lightning strikes as lightning always takes the shortest path. And while the lightning arrestor may protect the building underneath it, there is still the possibility of damage to electronic and electrical equipment due to high induced voltages.

Big buildings need arrestors at each corner of the structure since putting up a single arrestor to protect the whole building is not practical. There is an Australian standard for lightning protection of buildings: AS.1768. This standard is also relevant for lightning protection of TV antennas.

It is essential that TV antennas are separately earthed via the shortest path – as set out in the lightning protection standard. The coax should also be earthed at the antenna.

However, the only really certain way to avoid damage to TV sets in severe lightning storms is to disconnect the antenna fly-lead and the power plug.

Charging batteries at low temperatures

With regard to your project "Charge Controller For 12V Batteries" (EPE February 2010; SILICON CHIP, April 2008), you indicated that "No charging is allowed at temperatures below 0°C". Is there any specific reason for that? (D. K., via email).

● The restriction for no charging below 0°C was included because not many battery manufacturers specify the end point and float voltages for temperatures below 0°C.

If charging below 0°C is required, then the software can be altered to remove this restriction. The section of code that requires changing is shown below, starting at line 583 and ending at 587. Lines from 584 to 587 should be removed or remarked out. A remarked out line requires a semicolon (;) added at the beginning of the line:

```
;check for zero degrees or less
CK_ZRO:
;movf DIGITAL,w (line 584)
;sublw D'199' ; >199 (line 585)
;btfss STATUS,C (line 586)
;bsf THERMISTOR,1 ; set when 0 degrees or less (line 587)
```

Current clamp adapter for DMM

I've built the Current Clamp Adapter for A DMM from the September 2003 issue and have a query regarding the 100 turns of enamelled copper wire around half of the clip/core.

After this configuration is used for calibration using the 12V supply, are the windings left in place or taken off? In the section on "Using the clamp meter", the text says that "increasing the number of turns of the current-carrying wire through the core will improve the resolution. However this will only be possible if the wire diameter allows the extra turns to be fed through the core".

This seems to suggest that the windings should be left in place after calibration but the pictures don't seem to show the windings in place on the finished project and they don't seem to be a part of the circuit diagram.

I ask the question because I can't get meaningful readings, which is not to say that I haven't fouled something else up, although the initial testing and calibration as per the text seemed to work OK. Also, I wonder about the slight air gap in the core because of the "slightly thicker piece of plastic" glued to protect the Hall sensor. (M. W., via email).

● The 100 turns of wire are removed after calibration is complete. Having more than one turn for the current carrying wire when the unit is in use

Headphone Problems On Studio Series Preamplifier

I built the Studio Series Stereo Preamplifier (Silicon Chip, October & November 2005, April & July 2006) and the only problem I have is with the CON7 headphone amplifier switch. Audio is never routed from CON14 to CON6 and into the headphone amplifier.

The preamp works well on its own, including remote channel switching and volume (I have the powered ALPs pot). Audio is very good quality. Also, if I plug RCA connectors from a source directly into the headphone amplifier, that works very well too.

I just can't get the preamp CON14 to headphone amplifier switching to happen. Regardless of whether the headphone is plugged into the first socket (I've tried both), audio is always available at CON14 and never at CON 6. I think it may be to do with the PN100 (purchased from Jaycar).

With the headphone jack switch input (CON7) open (jumper link out), I get 3V at the switch terminal (ie, 5V into the 1.5kΩ resistor that goes to CON7 and 3V at the switch terminal). When the link is inserted, the switch terminal is earthed, pulling the voltage to 0V. This 0V exists all the way to the base of Q6.

When the jumper is removed, the voltage returns to 3V. This reduces to 2.57V after diode D6 and then to 729mV after the second 1.5kΩ resistor, therefore providing that 729mV to the base of Q6 (the PN100). At the same time, the emitter of Q6 has 3V. I don't believe this is enough to energise the coil and thus it won't switch relays RLY6 & RLY7, diverting the audio to CON6.

Without the link in, the base of Q6 is virtually zero (20mV). Interestingly, the emitter in this state is 5V. Doesn't this mean it should energise the coils and switch the relays? It clearly doesn't though.

What I do know is that the channel switching has pin 1 of the relay at 0V regardless of whether it was the source or not. If it wasn't the source, voltage at pin 10 is 0V and if it is the source, pin 10 is 5V. This would suggest that RLY6 & RLY7 should be 0V at pin 1 and 5V at pin 10 when the headphone plug is in. In practice, with no headphone plug in, pin 1 is 5V and pin 10 is 5V. With the plug in, pin 1 is 3V and pin 10 is 5V. This seems very wrong.

I definitely have the PN100 in the correct way around. It also confirmed a maximum h_{fe} when the right way around in my DMM. (P. G., via email).

- Transistor Q6 is evidently not switching on sufficiently to drive the relays. With the jack switch open, the transistor should switch on. Check that the base resistor is 1.5kΩ and that Q6's base-to-emitter resistor is 10kΩ. Note that the 'C' and 'E' labelling on the circuit is incorrect. Make sure that transistor Q6 is inserted as shown on the overlay diagram.

depends on whether you can place any more turns through the core. The air gap is so the core does not saturate and so the Hall Effect device can measure the flux produced by the current carrying wire through the core

If calibration is done with the same core gap, then any extra gap will be taken care of in the calibration.

Erratic timing from Programmable Ignition

I have a bit of a problem with my Programmable Ignition set-up (Silicon Chip, March, April & May 2007) at the moment. I have the system installed and running in my car. I using a Crane optical sensor and have locked the distributor advance so as to use the programmable system for stand-alone timing.

What I am having a problem with is that when I program the timing values into the module the timing becomes very erratic, wildly advancing and retarding and missing as viewed by my timing light. When I reset the module for all timing values and turn the distributor to advance it to the correct idle advance (17°) it runs smoothly and I am currently driving the car around like this. I have checked the phasing of the optical sensor and distributor cap repeatedly and can find no reason to suspect these as faulty.

What I have changed from the cir-

... continued on page 103

Notes & Errata

Vintage Radio, June 2010: the primary of the IF transformer in Fig.6(b) on page 94 should be connected to earth (chassis) and not to HT as shown. The RF choke (RFC) goes to the HT line.

WARNING!

Silicon Chip magazine regularly describes projects which employ a mains power supply or produce high voltage. All such projects should be considered dangerous or even lethal if not used safely.

Readers are warned that high voltage wiring should be carried out according to the instructions in the articles. When working on these projects use extreme care to ensure that you do not accidentally come into contact with mains AC voltages or high voltage DC. If you are not confident about working with projects employing mains voltages or other high voltages, you are advised not to attempt work on them. Silicon Chip Publications Pty Ltd disclaims any liability for damages should anyone be killed or injured while working on a project or circuit described in any issue of Silicon Chip magazine.

Devices or circuits described in Silicon Chip may be covered by patents. Silicon Chip disclaims any liability for the infringement of such patents by the manufacturing or selling of any such equipment. Silicon Chip also disclaims any liability for projects which are used in such a way as to infringe relevant government regulations and by-laws.

Advertisers are warned that they are responsible for the content of all advertisements and that they must conform to the Trade Practices Act 1974 or as subsequently amended and to any governmental regulations which are applicable.

MARKET CENTRE

Cash in your surplus gear. Advertise it here in SILICON CHIP

ELNEC IC PROGRAMMERS

High quality
Realistic prices
Free software updates
Large range of adaptors
Windows 95/98/Me/NT/2k/XP

CLEVERSCOPE USB OSCILLOSCOPES

2 x 100MSa/s 10bit inputs + trigger
100MHz bandwidth
8 x digital inputs
4M samples/input
Sig-gen + spectrum analyser
Windows 98/Me/NT/2k/XP

IMAGECRAFT C COMPILERS

ANSI C compilers, Windows IDE
AVR, TMS430, ARM7/ARM9
68HC08, 68HC11, 68HC12

GRANTRONICS PTY LTD

www.grantronics.com.au

SPLat CONTROLS **Tough times**

demand innovative solutions!

In tough economic times you need to watch every dollar. SPLat embedded controllers give OEMs more functionality per dollar than any competing product. Check out our website today and discover how we can help you remain competitive.

Made in Australia, used by OEMs world-wide

splat-sc.com

537 Kits, Modules and Boxes

Innovative & affordable projects for hobby, school & industry

Shop on-line at: **www.kitstop.com.au**

electronics-the fun starts here

MXA072
8 Message Solid State Recorder with Speaker

VIDEO - AUDIO - PC

distribution amps - splitters
digital standards converters - tbc's
switchers - cables - adaptors
genlockers - scan converters
bulk vga cable - wallplates

DVS5c & DVS5s
High Performance
Video / S-Video
and Audio Splitters

MD12 Media Distribution Amplifier

QUEST

Quest AV+ VGA Splitter VGS2

HQ VGA Cables

AWP1 A-V Wallplate

Come to the specialists... **QUESTRONIX**

Quest Electronics™ Pty Limited abn 83 003 501 282 t/a Questronix

Products, Specials & Pricelist at www.questronix.au

fax (02) 4341 2795 **phone (02) 4343 1970**

email: questav@questronix.com.au

FOR SALE

SPEAKERWORKS: technically qualified specialist (45 years) vintage, professional, hifi speaker repairs. Original/ custom-made re-cones, diaphragms, modifications and upgrades. **swa@speakerworks.com.au**

PCBs MADE, ONE OR MANY. Any format, hobbyists welcome. Sesame Electronics Phone (02) 9593 1025. **sesame@sesame.com.au www.sesame.com.au**

terrystransistors.com.au: genuine MJE15030/31 BD139/40 2SA970 BF469/470 MJE340/50 MJL4302A MJ-L4281A **ON@$9.20** MJL21193/4 MJ-L1302A MJL3281A 2SA1085 MPSA42 Cheap postage.

LEDs! Nichia, Cree and other brand name LEDs at excellent prices. LED drivers, including ultra-reliable linear driver options. Many other interesting and hard-to-find electronic items! **www.ledsales.com.au**

HMI and PLC in One! Comfile Technologies CuTouch (CT1721-C). Also available in Black and White screen for viewing outdoors. The CuTOUCH comes integrated with industrial controller, Blue & White Graphic LCD, touch-input processor, opto-isolated I/O boards, analog inputs & outputs, and Plug-n-Play support for Relay boards. 64 I/O plus 6 channels PWM or DAC, 4 external interrupts, and 2 16-bit counters.

The CuTOUCH units can be programmed in BASIC or Relay Ladder Logic using the Cubloc Studio Software available from our website. Applications can range anywhere from home automation to industrial gas monitoring. By providing easy-to-use GUI tools, Comfile Technology guarantees you a competitive edge over any other touch screen products on the market today. Replace outdated PLC, push-buttons, small LCD combo with 1 single CuTOUCH™.

Many other Windows CE & XP PLCs, core modules and accessories. Call for info: **sales@ozcomfile.com.au** or 1300 208 570. **www.ozcomfile.com.au**

Australian Valve Audio Transformers

Output Transformers
Power Transformers

WEB: WWW.AVAT.COM.AU
Ph: 03 94316863

RCS RADIO/DESIGN is at 41 Arlewis St, Chester Hill 2162, NSW Australia

Advertising rates for these pages: Classified ads: $29.50 (incl. GST) for up to 20 words plus 85 cents for each additional word. Display ads: $54.50 (incl. GST) per column centimetre (max. 10cm). Closing date: 5 weeks prior to month of sale. To book, email the text to **silicon@siliconchip.com.au** and include your name, address & credit card details, or fax (02) 9939 2648, or phone (02) 9939 3295.

Battery Packs & Chargers

Siomar Battery Engineering
www.batterybook.com
Phone (08) 9302 5444

Printed Circuit Board Manufacture
48-Hour service * High quality * Low prices
1 offs to any quantity
Artwork design if required
Call for obligation free quote...
INSTANT PCBs, PO Box 448, Avalon 2107
Ph (02)9974 1189 Fax (02)9974 5491

WOW! A QUALITY DSP HF COMMUNICATIONS RECEIVER FOR 10% OFF?

Yes, it's true! Don't let its tiny size fool you. This powerhouse receiver covers the AM, FM, LW and entire SW bands from 3.5 to 30MHz – and has genuine digital signal processing!

Exclusive to Avcomm, the Tecsun PL-310 normally sells for $90.00 but if you say you saw it in SILICON CHIP, Avcomm will give you 10% off (June/July only)!

Hurry - stocks are limited. Call Avcomm now - (02) 9939 4377

For more details visit www.avcomm.com.au

20 years experience! SPEAKERBITS

HI-FI SPEAKER REPAIRS

YOUR EXPERT SPEAKER REPAIR SPECIALISTS

Specialising in UK, US and Danish brands. Speakerbits are your vintage, rare and collectable speaker repair experts. Foam surrounds, voice coils, complete recone kits and more. Original OEM parts for Scan-Speak, Dynaudio, Tannoy, JBL, ElectroVoice and others!

tel: 03 9647 7000 www.speakerbits.com

Ask SILICON CHIP – continued from page 101

cuit is the supply for the Crane optical sensor. The 120Ω 5V supply to the Crane optical sensor was not giving a reliable signal to the module so I have run 12V to the optical sensor as indicated in the Crane literature.

I have the dwell set at 5.1ms and the trigger signal is High. Changing the response to low RPM made no difference to the very rough idle and running when the timing values were programmed into the unit. (R. B., via email).

- The problem is possibly due to the optical trigger being affected by the ignition coil firing. Having the triggering point the same as the coil firing (with the programmable ignition set to zero advance) will work OK but any difference in advance will be affected. This is detailed in the May 2007 issue under the heading "Timing Problems with Reluctor Triggers". The problem could also be evident with other triggers such as the optical trigger. Make sure the high-tension wiring is run well away from the optical trigger wiring.

A solution might be to set the static timing to greater than the maximum advance and retarding the timing with the programmable ignition to the correct amount of overall advance.

Substitutes for Sanyo power transistors

I have an old Realistic tuner/amplifier which has dropped one channel and I have been advised that the power transistors have failed. These transistors are Sanyo D330E and B514E and I can not find a local supplier or any data list for alternatives. Do you happen to know of any supplier or preferably similar transistors which can be used?

Also many large clubs (League, Golf, RSL, etc) run raffles using fairly expensive number generators which connect to the TV system. However, many small clubs, retirement villages etc also run internal raffles for fund raising using raffle ticket books and draw the butts out of a bucket to find a winner. Could you advise whether any random number generator kit has been designed (or could be easily modified) to give random ticket numbers, with the first and last ticket numbers specified?

This would be a boon as it would save constant criticism of number bias, lost tickets or tickets sticking together. Alternatively, is there any chance of such a kit being designed? (S. M., Tea Gardens, NSW).

- Those Sanyo transistors appear to be unavailable and we cannot refer you to any substitutes. Assuming that the amplifier power output is not more than 50W per channel, you could take a punt and use the same complementary plastic power transistors that we used in the SC480 power amplifier modules, ie, TIP2955 and TIP3055. These are relatively cheap and if they don't work, you don't have a lot to lose.

Alternatively, you could build the SC480 modules and drop them into your old amplifier, provided they will fit.

We published a Pools/Lotto Selector in May 1989 and a Random Number Generator/Chook Raffle program in April 1998. The latter was for a computer and the range of numbers can be selected. SC

and has all the published PC boards from SC, EA, ETI, HE, AEM & others. Ph (02) 9738 0330. **sales@rcsradio.com.au; www.rcsradio.com.au**

WANTED

CUSTOMERS WANTED: Truscotts Electronic World – large range of semiconductors and passive components for industry, hobbyist and amateur projects including Drew Diamond. 27 The Mall, South Croydon, Melbourne. Phone (03) 9723 3860. **sales@electronicworld.com.au**

WANTED: EARLY HIFIs, AMPLIFIERS, Speakers, Turntables, Valves, Books, Quad, Leak, Pye, Lowther, Ortofon, SME, Western Electric, Altec, Marantz, McIntosh, Tannoy, Goodmans, Wharfedale, radio and wireless. Collector/Hobbyist will pay cash. (07) 5471 1062. **johnmurt@highprofile.com.au**

WANTED: circuit diagram for a BWD-207b 12A linear power supply. Contact **editor@siliconchip.com.au**

KIT ASSEMBLY

KEITH RIPPON KIT ASSEMBLY & REPAIR:
* Australia & New Zealand;
* Small production runs.
Phone Keith 0409 662 794.
keith.rippon@gmail.com

Do you eat, breathe and sleep TECHNOLOGY?

Opportunities exist for experienced Sales Professionals & Store Management across Australia & NZ

Jaycar Electronics is a rapidly growing, Australian owned, international retailer with more than 60 stores in Australia and New Zealand. Due to our aggressive expansion program we are seeking dedicated sales professionals to join our retail team to assist us in achieving our goals. We pride ourselves on technical expertise from our staff. Do you think that the following statements describe you? Please put a tick in the boxes that do:

- ☐ Knowledge of core electronics, particularly at a component level
- ☐ Retail experience, highly regarded
- ☐ Assemble projects or kits yourself for your car, computer, audio etc
- ☐ Have energy, enthusiasm and a personality that enjoys helping people
- ☐ Opportunities for future advancement and development
- ☐ Why not do something you love and get paid for it?

Please email us your applicaton & CV in PDF format, including location preference. We offer a competitive salary, sales incentive and have a generous staff purchase policy. Applications should be emailed to

jobs@jaycar.com.au

Jaycar Electronics

Jaycar Electronics is an Equal Opportunity Employer & actively promotes staff from within the organisation.

RFMA RF Modules Australia

Low Power Wireless Connectivity Specialists

BIM1-151.300-10
VHF FM Transceiver
+BiM1T/BiM1R
Range: 5km+
Power: 100mW
Data rate 10kbps
Also: 151.275 & 151.6MHz

Applications:
Rural
Utilities
Industrial
Commercial
Government
Meter Reading

BiM2A-433-64
UHF FM Transceiver
+BiM2T/BiM2R
Range: 500m+
Upto: 25mW
Data rate 64kbps
33mm x 23mm x 4mm

RADIOMETRIX: Low Power, Licence Exempt Radio Modules

RF Modules Australia. P.O. Box 1957 Launceston, TAS., 7250.
Ph: 03-6331-6789. Email: sales@rfmodules.com.au. Web: rfmodules.com.au

into RF?

There's something to suit every radio frequency fan in the SILICON CHIP reference bookshop

RF Circuit Design
– by Chris Bowick
A new edition of this classic RF design text - tells how to design and integrate RF components into virtually any circuitry.
$75

Practical RF H'book
– by Ian Hickman
A reference work for technicians, engineers, students and the more specialised enthusiast. Covers all the key topics in RF that you need to understand
$90

Practical Guide To Satellite TV
– by Garry Cratt
The reference written by an Aussie for Aussie conditions.Everything you need to know.
$49

You'll find many more technical titles in the SILICON CHIP reference bookshop – see elsewhere in this issue

DOWNLOAD OUR CATALOG AT
www.iinet.net.au/~worcom

WORLDWIDE ELECTRONIC COMPONENTS
PO Box 631, Hillarys, WA 6923
Ph: (08) 9307 7305 Fax: (08) 9307 7309
Email: worcom@iinet.net.au

Silicon Chip

Circuit Ideas Wanted

Do you have a good circuit idea? If so, sketch it out, write a brief description of its operation & send it to us.

Provided your idea is workable & original, we'll publish it in Circuit Notebook & you'll make some money. We pay up to $100 for a good circuit idea or you could win some test gear.

Silicon Chip Publications, PO Box 139, Collaroy, NSW 2097.

Advertising Index

Altronics	76-79
Amateur Scientist CD	17
Aust. Valve Audio Transformers	102
Av-Comm	103
Dick Smith Electronics	22-25
Emona Instruments	45
Grantronics	102
Hare & Forbes	OBC
High Profile Communications	103
Instant PCBs	103
Jaycar	IFC,49-56,104
Keith Rippon	103
Kitstop	102
LED Sales	102
Oatley Electronics	IBC
Ocean Controls	6
OzComfile	102
PCBCART	9
Quest Electronics	102
RCS Radio	102
RF Modules	104
Rockby Electronics	3
Sesame Electronics	102
Silicon Chip Binders	41
Silicon Chip Bookshop	92-93
Silicon Chip Order Form	39
Siomar Battery Engineering	64,103
Soundlabs Group	7
Speakerbits	103
Speakerworks	102
Splat Controls	102
Tenrod	5
Terry's Transistors	102
Truscotts Electronic World	103
Wagner Electronics	47
Wiltronics	9
Worldwide Elect. Components	104

PC Boards

Printed circuit boards for SILICON CHIP designs can be obtained from RCS Radio Pty Ltd. Phone (02) 9738 0330. Fax (02) 9738 0331.

OATLEY ELECTRONICS

www.oatleyelectronics.com

HOT PRICED PIC CHIPS

MICROPROCESSOR
PIC16F628A
$3 EACH

OR 5 FOR $10 [PIC16F628A]

NEW K282 – TUBE BASED STEREO RIAA PREAMPLIFIER

This low cost tube preamplifier with RIAA compensation amplifies the output of a magnetic cartridge, to a Line Level required by power amplifiers etc. It is based on four low power consumption Raytheon JAN6418. This kit includes a 110-240vac power adaptor (with international plug adaptors) and all onboard components. **[K282] $47**
Read the kit reviews at diyaudioprojects.com

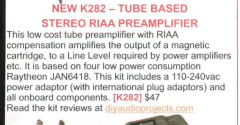

LET THERE BE LIGHT!

This package includes two 10W LED's (Clusters) & a K286 switched mode inverter kit.
Operates from 5-15V DC. Extra heat-sinking required for LED's.

NEW K273 and K273IR RELAY DRIVER AND INFRA-RED TRIGGER KITS

THE **K273IR** kit uses an IR LED and IR receiver to detect the presence of hands or other objects. It has a TTL output that can be used to trigger other circuits like our K273 relay kit. It can be powered from a 5VDC supply or from the K273 kit. The **K273** kit is mains powered (240VAC or 110VAC). It uses an input from a switch or other circuit like our K273IR to switch a relay. The kit comes with a relay rated at 10A @250VAC. There is an optional larger relay available rated at 20A @240VAC. Applications include: Turning on warm air hand dryers, solenoid valves for taps and opening doors etc. Optional large 20A relay [OR20] $6

[K273IR] $12.50

$22.50 [K273]

SOLAR BARGAINS

HIGH QUALITY SOLAR PANELS WITH ALUMINUM FRAMES & TOUGHENED GLASS

34W (1X 34W solar panel) **[SP34] $190.**
102W (3X 34W solar array) **[SP102] $550.**
204W (6X 34W solar array) **[SP102] $1000.**

8W SOLAR ARRAY + K251A REGULATOR
12V - 8W output. **[2XSP4W6] $55.00**

MONOCRYSTALLINE UNFRAMED 6W SOLAR PANELS
These panels are fully sealed but have no aluminum frame. **[SP6UF] $50**

CHECK OUT OUR WEB SITE FOR MORE INFO AND SOLAR BARGAINS.

HIGH POWER - 0.5W / 150mA / 10mm WHITE LED
25 Lumens @ 150mA/ 80,000 mcd @ 20mA.
Vf min @ 20mA = 3.0
Vf max @ 20mA = 3.6
No additional heatsinking needed.
Water clear lens.
[L10W] $2.40

TUBE BASED 5/10W POWER AMPLIFIER KIT

This kit uses a Raytheon JAN6418 tube and a LM1875T IC to produce that rich warm tube sound. It will deliver 5W into an 8 Ohm load or 10W into a 4 Ohm load. Kit includes a suitable power supply (110-240V AC to 24VDC @ 1A) & all onboard parts. A heatsink is now supplied in the kit.
[K281] $29.00

NEW K275 and K275A HIGH POWER PWM DC MOTOR SPEED CONTROLLERS

These two kits can be used for controlling the speed of 12, 24, 36 & 48V Motors. A Hall Effect device based Motorcycle style Throttle, or a simple potentiometer can be used to control the speed. Both of the kits have identical speed control circuitry, but K275 has additional circuitry that enables the direction of the motor to be reversed. Kit K275A is a PWM speed controller without the reversing circuitry. The reversing circuitry employs small high current 30A relays. K275 is a complete combination of PWM speed controller and the reversing circuitry that employs 2 sets of relay contacts that are connected in parallel. This kit will not change direction until the motor has stopped allowing switching only when there is no current flowing as relays can carry more current than they can switch, allowing control of higher motor currents.

$24 [K275A]

$39 [K275]

8W LED LAMP (PRAWNING LIGHT) KIT

Employs 16 X 1/2W white LEDs to make a very bright lamp. Its SMPS supply consumes a constant 8W from a 9-30V DC supply. The kit can also fit inside a salsa dip jar to make a waterproof housing for a very bright prawning light. Kit includes PCB, LEDs and all on-board components.[K263] $28

100W 12 / 24V DC MOTOR, 150W SPEED CONTROLLER AND THROTTLE BUNDLE

1X SC112 (12V or 24V / 100W) Powerful, ball raced DC motor. 64mm x 44mm x 22mm, 8mm shaft. Some sprockets and pulleys to suit, see our web site.
or
1X SC124

1X SPC150 150W speed controller 24V (can be modified for 12V with a resister change).

1X THROT2 Handle bar type throttle

Price normally $48.90
Special bundle price...
24V **[SCB24] $35**
12V **[SCB12] $35**

4W LED LAMP (PRAWNING LIGHT) KIT

Uses 8 X 1/2W white LEDs to make a very bright lamp. Its SMPS supply uses a constant 4W from a 9-30V DC supply. The kit can fit inside a salsa dip jar to make a waterproof housing for a prawning light. Kit inc. PCB, LEDs and all on-board components.[K263A]$20

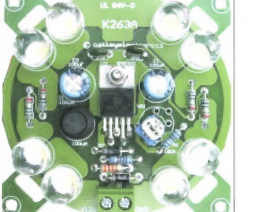

www.oatleyelectronics.com Suppliers of kits and surplus electronics to hobbyists, experimenters, industry & professionals.
OR www.oatley.com Orders: Ph (02) 9584 3563, Fax 9584 3561, sales@oatleyelectronics.com, PO Box 89 Oatley NSW 2223
major credit cards accepted, Post & Pack typically $7 Prices subject to change without notice ACN 068 740 081 ABN18068 740 081

SC_JUL_09

100% Australian owned Est. 1930

HARE&FORBES MACHINERYHOUSE

LET THE CELEBRATIONS BEGIN:

HAPPY NEW FINANCIAL YEAR

SPRING CALIPERS

DIVIDERS $9 (Q634)

INSIDE $9 (Q635)

OUTSIDE $9 (Q636)

THREAD GAUGE

28 Whitworth/ 24 Metric $15 (Q610)

55 & 60°

RADIUS GAUGE

1-7mm $20 (Q614)

7.5-15mm $29 (Q615)

RULES

- Metric/Imperial graduations
- Rust and wear resistant

6"/150	$6	(Q620)
12"/300	$14	(Q621)
24"/600	$20	(Q622)
40"/1000	$25	(Q623)

H.S.S. FULLY GROUND CENTRE DRILLS

Size Dia.	Point mm	Shank mm		
1	1.25	3.15	$7	(D501)
2	2	5	$9	(D502)
3	3.15	8	$11	(D503)
4	4	10	$13	(D504)
5	5	12.5	$20	(D505)

DIGITAL ANGLE GAUGE

- Absolute & incremental
- Zero button • 360° Range

$66 (M978)

TAP & DRILL SET

29 piece Metric Set $69 (T019)

COUNTERSINK SET

Metric 6-20mm $59 (D105)

HOLE ENLARGING DRILL SET

3 piece Set $69 (D107)

THREAD REPAIR KIT

- Metric (5,6,8,10,12mm)

$149 (T100)

HEX KEY SETS 9 Piece

- Imperial - 1/16" - 3/8" (H800)
- Metric - 1.5 - 10mm (H801)
- Flip open design
- Extra long ball end hex keys
- Ball head design allows turning of hard to reach fasteners from up to a 30° angle

$17 (H800/H801)

COMBINATION SET

- 4 piece set
- Satin Chrome Rule: 12"/300mm rule

$89 (Q200)

DIAL THICKNESS GAUGE

- 0-10mm range
- 0.01mm graduation
- Standard steel contact point and anvil ø10mm Diameter
- Compact design

$85 (Q506)

DRILLING MACHINE

- 1HP 240V motor
- 16-speed
- 20mm drill capacity
- Safety micro switch on belt cover
- Includes 16mm drill chuck, arbor & Light

Bench Model $339 (D144)

DRILL PRESS VICES

100mm	$22	(V124)
125mm	$27	(V125)
150mm	$33	(V126)

WORKSHOP DRILL SET

- 170 Piece 1-10mm
- 1-10mm in 0.5mm increments, 10 drills in each size up to 8mm then 5 per size

$145 (D126)

HSS DRILL SETS Precision ground

25pce Metric 1-13mm $66 (D127)

25pce Imperial 1/16 - 1/2" $66 (D128)

BENCH VICES Cast Steel

4"	100mm	$59	(V088)
5"	125mm	$89	(V089)
6"	150mm	$129	(V090)

HM-10 MINI MILL DRILL

- 350W, 240V Motor
- 385mm x 93mm Table
- Electronic variable speed
- 2 speed gearbox
- Head tilts ±45° both directions
- Ground work table with T-slots
- Spring return assisting milling head
- Vertical micro feed dial .025mm
- Metric dial graduations 0.02mm
- 2-speed gearbox (high / low) drive system to maximise torque
- Travels:
  (X) 228mm
  (Y) 110mm
  (Z) 190mm

$825 (M150)

COLLET CHUCK SETS 6 Piece

- Metric & Imperial

ER32-3MT 6-20mm / 1/4-3/4" $219 (C822S)

FITTING & MACHINING BOOK

- 639 pages of technical information
- Hard cover

$69 (L341)

AL-30 BENCH LATHE

- 250W 240V Motor
- 300mm between centres
- 90mm centre height
- 20mm spindle bore
- Precision "V"-beds are hardened and ground
- Cast iron ribbed bed
- Dovetailed cross and compound slides
- Electric variable speed 0-2500rpm
- High/low speed gear lever
- Forward/reverse spindle direction switch
- Conveniently mounted safety emergency stop switch
- Includes a set of change gears for metric thread cutting

Includes 5 piece 8mm Turning Tool Set

$799 (L194)

LIKE THESE! SEE MORE ONLINE

SYDNEY Ph: (02) 9890 9111
BRISBANE Ph: (07) 3274 4222
MELBOURNE Ph: (03) 9212 4422
PERTH Ph: (08) 9373 9999

www.machineryhouse.com.a

Specifications & Prices are subject to change without notification. All prices include G.S.T. and valid until 27-07-10 (*WA prices may be higher due to freight costs)